TRONCATRICE A DISCO PER METALLI FERROSI
CUTTING-OFF MACHINE WITH CIRCULAR BLADE FOR FERROUS METALS
METALL-KREISSAEGE
TRONÇONNEUSE A DISQUE POUR METAUX FERREUX
CORTADORA DE DISCO PARA METALES FERROSOS

MANUALE DI ISTRUZIONI PER L'USO - INSTRUCTION MANUAL FOR OPERATION
BETRIEBSANLEITUNG - MANUEL D'INSTRUCTIONS POUR L'EMPLOI
MANUAL DE INSTRUCCIONES DE USO

COSTRUTTORE:
MANUFACTURER :
ERBAUER:
CONSTRUCTEUR:
CONSTRUCTOR:

MACC S.p.A. SCHIO (VI) - ITALY

MODELLO:
MODEL :
MODELL:
MODELE:
MODELO:

TA 400

MATRICOLA:
SERIAL NUMBER:
KENNNUMMER:
MATRICULE:
MATRICULA:

ANNO DI COSTRUZIONE:
YEAR OF CONSTRUCTION:
BAUJAHR:
ANNEE DE CONSTRUCTION:
AÑO DE COSTRUCCION :

2010

MACC
Costruzioni Meccaniche S.p.A.
Made in Italy

E' SEVERAMENTE VIETATO UTILIZZARE LA MACCHINA SENZA LIQUIDO DI TAGLIO.

IT IS STRICTLY FORBIDDEN TO USE THE MACHINE WITHOUT CUTTING FLUID.

ES IST STRENG VERBOTEN, DIE MASCHINE OHNE SCHNEIDFLÜSSIGKEIT IN BETRIEB ZU NEHMEN.

IL EST SEVEREMENT INTERDIT D'UTILISER LA MACHINE SANS LIQUIDE DE COUPE.

SE PROHÍBE TERMINANTEMENTE UTILIZAR LA MÁQUINA SIN LÍQUIDO DE CORTE.

É SEVERAMENTE PROIBIDO UTILIZAR A MÁQUINA SEM LÍQUIDO DE CORTE.

Magyarul

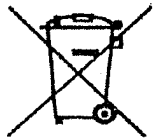

Feleslegessé vált elektromos és elektronikus készülékek hulladékként való eltávolítása (Használható az Európai Unió és egyéb európai országok szelektív hulladékgyűjtési rendszereiben)

Ez a szimbólum a készüléken vagy a csomagolásán azt jelzi, hogy a terméket ne kezelje háztartási hulladékként. Kérjük, hogy az elektromos és elektronikai hulladék gyűjtésére kijelölt gyűjtőhelyen adja le. A feleslegessé vált termékének helyes kezelésével segít megelőzni a környezet és az emberi egészség károsodását, mely bekövetkezhetne, ha nem követi a hulladék kezelés helyes módját. Az anyagok, újrahasznosítása segít a természeti erőforrások megőrzésében. A termék újrahasznosítása érdekében további információért forduljon a lakhelyén az illetékesekhez, a helyi hulladékgyűjtő szolgáltatóhoz vagy ahhoz az üzlethez, ahol a terméket megvásárolta.

Česky

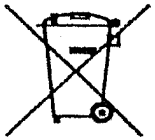

Nakládání s nepotřebným elektrickým a elektronickým zařízením (platné v Evropské unii a dalších evropských státech uplatňujících oddělený systém sběru)

Tento symbol umístěný na výrobku nebo jeho balení upozorňuje, že s výrobkem po ukončení jeho životnosti by nemělo být nakládáno jako s běžným odpadem z domácnosti. Místo toho by měl být odložen do sběrného místa, určeného k recyklaci elektronických výrobků a zařízení. Dodržením této instrukce zabráníte negativním dopadům na životní prostředí a zdraví lidí, které naopak může být ohroženo nesprávným nakládním s výrobkem při jeho likvidaci. Recyklováním materiálů, z nichž je vyroben, pomůžete zachovat přírodní zdroje. Pro získání dalších informací o recyklaci tohoto výrobku kontaktujte, prosím, místní orgány státní správy, místní firmu zabezpečující likvidaci a sběr odpadů nebo prodejnu, v níž jste výrobek zakoupili.

Slovensky



Likvidácia starých elektrických a elektronických zariadení (Platí v Európskej únii a ostatných európskych krajinách so zavedeným separovaným zberom)

Tento symbol na výrobku alebo obale znamená, že s výrobkom nemôže byť nakladané ako s domovým odpadom. Miesto toho je potrebné ho doručiť do vyhradeného zberného miesta na recykláciu elektrozariadení. Tým, že zaistíte správne zneškodnenie, pomôžete zabrániť potenciálnemu negatívnemu vplyvu na životné prostredie a ľudské zdravie, ktoré by v opačnom prípade hrozil pri nesprávnom nakladaní s týmto výrobkom. Recyklácia materiálov pomáha uchovávať prírodné zdroje. Pre získanie ďalších podrobných informácií o recyklácii tohoto výrobku kontaktujte prosím váš miestny alebo obecný úrad, miestnu službu pre zber domového odpadu alebo predajňu, kde ste výrobok zakúpili.

Türkçe

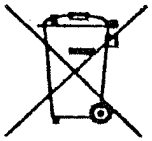

Eski Elektrikli & Elektronik Ekipmanların Atılması (Avrupa Birliği'nde ve ayrı toplama sistemlerine sahip diğer Avrupa ülkelerinde uygulanır)

Ürün veya ambalajı üzerinde bulunan bu sembol, bu ürünün bir ev atığı olarak muameleye görmemesi gerektiğini gösterir. Bunun yerine, elektrikli ve elektronik ekipmanların geri dönüşümü için mevcut olan uygun toplama noktasına teslim edilmelidir. Bu ürünün doğru şekilde atılmasını sağlayarak, bu ürüne yanlış müdahale edilmesi sonucunda ortaya çıkabilecek ve çevre ile insan sağlığı üzerinde olumsuz etkide bulunabilecek durumların önlemesine yardımcı olmuş olursunuz. Malzemelerin geri dönüşümü, doğal kaynakları korumamıza yardımcı olacaktır. Bu ürünün geri dönüşümüyle ilgili daha fazla bilgi için, lütfen sehrinizde bulunan yerel ofisiе, evsel atıklar toplama servisinizle veya bu ürünü satın aldığınız magazayla temasa geçin.

Slovensko

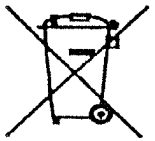

Oddaja stare električne in elektronske opreme (veljavno v evropski uniji in ostalih evropskih državah s sistemom zbiranja ločenih odpadkov)

Če se na izdelku ali na njegovi embalaži nahaja ta simbol, pomeni, da z izdelkom ne smete ravnati enako kot z drugimi gospodinjskimi odpadki. Morate ga oddati na ustrezno zbirno mesto za recikliranje električne in elektronske opreme. S pravilno oddajo tega izdelka boste pomagali preprečiti negativne posledice na okolje in zdravje ljudi, do katerih bi prišlo v primeru neustreznega ravnanja ob odstranitvi tega izdelka. Recikliranje materiala bo pripomoglo k ohranjevanju naravnih virov. Podrobnejše informacije o recikliranju tega izdelka lahko dobite pri lokalni mestni upravi, službi oddajanja gospodinjskih odpadkov ali v trgovini, kjer ste izdelek kupili. Odpadno električno in elektronsko opremo lahko oddate brezplačno tudi distributerju neposredno ob dobavi električne oz. elektronske opreme.

Русский

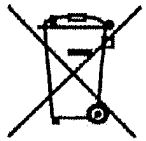

Утилизация электрического и электронного оборудования (директива применяется в странах Евросоюза и других европейских странах, где действуют системы раздельного сбора отходов)

Данный знак на устройстве или его упаковке обозначает, что данное устройство нельзя утилизировать вместе с прочими бытовыми отходами. Его следует сдать в соответствующий приемный пункт переработки электрического и электронного оборудования. Неправильная утилизация данного изделия может привести к потенциально негативному влиянию на окружающую среду и здоровье людей, поэтому для предотвращения подобных последствий необходимо выполнять специальные требования по утилизации этого изделия. Переработка данных материалов поможет сохранить природные ресурсы. Для получения более подробной информации о переработке этого изделия обратитесь в местные органы городского управления, службу сбора бытовых отходов или в магазин, где было приобретено изделие.

Suomi

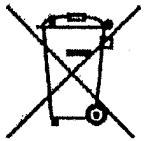

Käytöstä poistetun sähkö- ja elektroniikkalaitteen hävitys (Euroopan Unionissa ja muiden Euroopan maiden keräysjärjestelmät)

Symboli, joka on merkitty Tuotteeseen tai sen pakkaukseen, osoittaa, että tätä tuotetta ei saa käsitellä talousjätteenä. Tuote on sen sijaan luovutettava sopivaan sähkö-ja elektroniikkalaitteiden kierrätyksestä huolehtivaan keräyspisteeseen. Tämän tuotteen asianmukaisen hävittämisen varmistamisella autetaan estämään sen mahdolliset ympäristöön ja terveyteen kohdistuvat haittavaikutukset, joita voi aiheutua muussa tapauksessa tämän tuotteen epäasianmukaisesta jätekäsitteistä. Materiaalien kierrätys säästää luonnonvaroja. Tarkempia tietoja tämän tuotteen kierrättämisestä saa paikallisesta kunnantoimistosta.

Dansk

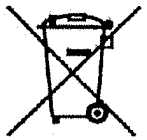

Bortskaffelse af elektrisk og elektronisk udstyr (gælder i EU og andre europæiske lande med egne indsamlingssystemer)

Hvis dette symbol findes på produktet eller på emballagen betyder det, at det pågældende produkt ikke må bortskaffes som almindeligt husholdningsaffald. Du skal i stedet aflevere det på et indsamlingssted, så det elektriske og elektroniske udstyr kan blive genbrugt. Når du bortskaffer produktet korrekt, hjælper du med at forhindre de mulige negative påvirkninger af miljøet eller sundheden, der kan opstå, hvis produktet bortskaffes på upassende vis. Genbrug af materialer er med at bevare naturens ressourcer. Yderligere oplysninger om genbrug af produktet fås på kommunen, på genbrugscentralen eller i den butik, hvor du købte produktet.

Português

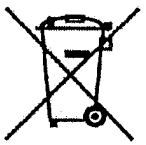

Tratamento de Equipamentos Eléctricos e Electrónicos no final da sua vida útil (Aplicável na União Europeia e em países Europeus com sistemas de recolha selectiva de resíduos)

Este símbolo, colocado no produto ou na sua embalagem, indica que este não deve ser tratado como resíduo urbano indiferenciado. Deve sim ser colocado num ponto de recolha destinado a resíduos de equipamentos eléctricos e electrónicos. Assegurando-se que este produto é correctamente depositado, irá prevenir potenciais consequências negativas para o ambiente bem como para a saúde, que de outra forma poderiam ocorrer pelo mau manuseamento destes produtos. A reciclagem dos materiais contribuirá para a conservação dos recursos naturais. Para obter informação mais detalhada sobre a reciclagem deste produto, por favor contacte o município onde reside, os serviços de recolha de resíduos da sua área ou a loja onde adquiriu o produto.

Ελληνικά

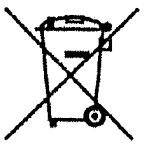

Αποκομιδή Παλαιού Ηλεκτρικού & Ηλεκτρονικού Εξοπλισμού(Ισχύει στην Ευρωπαϊκή Ένωση και άλλες Ευρωπαϊκές χώρες με ξεχωριστά συστήματα περισυλλογής)

Το σύμβολο αυτό επάνω στο προϊόν ή στη συσκευασία του σημαίνει ότι το προϊόν δεν πρέπει να πεταχτεί μαζί με τα οικιακά απορρίμματα αλλά πρέπει να παραδοθεί σε ένα κατάλληλο σημείο συλλογής ηλεκτρολογικού και ηλεκτρονικού υλικού προς ανακύκλωση. Με το να βεβαιωθείτε ότι το προϊόν πετάχτηκε σωστά, βοηθάτε στην πρόληψη πιθανών αρνητικών επιπτώσεων στο περιβάλλον και την υγεία. Η ανακύκλωση των υλικών θα βοηθήσει στην εξοικονόμηση φυσικών πόρων. Για περισσότερες πληροφορίες σχετικά με την ανακύκλωση αυτού του προϊόντος, παρακαλούμε επικοινωνήστε με τις υπηρεσίες καθαριότητας του δήμου σας ή το κατάστημα όπου αγοράσατε το προϊόν.

1. INTRODUCTION

The "Operating instructions" are an integral part of the machine and should be consulted before, during and after the start up of the machine and whenever else required. The content of these instructions should always be carefully observed.
The observance of the above is the only way to achieve the two fundamental aims of this manual:

- **Optimization of machine performance**
- **Prevent damage to the machine and injury to the operator**

The index of the chapters and the index of the drawings, diagrams and tables is contained in chapter 3 and can be used to help the location of specific information.

CAUTION : BEFORE INSTALLING THE MACHINE, READ THE OPERATING INSTRUCTIONS CAREFULLY

2. INFORMATION ABOUT MAINTENANCE ASSISTANCE

2.1 GUARANTEE

- MACC S.p.a. products are guaranteed against material and manufacturing defects for a period of 12 months from the date of delivery or, if the machine is installed by MACC employees, from the date of machine start up.
- The buyer is only entitled to the replacement of parts which are acknowledged as faulty: carriage and packing are at the buyer's expense.In the event of the above, the following information should be supplied:

1. Date and number of purchasing document
2. Machine model
3. Serial number
4. Code of any relevant drawings

- Requests for compensation for the inactivity of the machine will not be accepted.
- The guarantee does not cover uses which are not in line with these operating instructions which are an integral part of the machine. Nor is maintenance covered if the instructions supplied are not observed.
- The guarantee will not cover machines which have undergone unauthorized modifications.
- Modification or tampering with the safety devices is strictly forbidden.

3. INDEX

3.1 INDEX OF CHAPTERS

Chap. 1 Introduction
Chap. 2 Information about maintenance assistance
Chap. 3 Index of chapters, drawings, diagrams and tables
Chap. 4 Description of the machine
Description of the machine and its components
Intended and unsuitable uses of the machine
Chap. 5 Main technical data
Chap. 6 Handling and transportation
Chap. 7 Installation
Chap. 8 Start up and operation
Devices and their location
Tools supplied
Operation
Special safety checks
General safety rules
Measures to prevent residual risks
Safety, Guidance, Notice Labels on the Machine
Chap. 9 Maintenance and repairs
General safety measures
Maintenance
Chap. 10 Information regarding environmental noise
Chap 11 Laying of – Demolition
Chap 12 List of spare parts

3.2 INDEX OF DRAWINGS, DIAGRAMS AND TABLES

ENCL. TYPE	DESCRIPTION	ENCL No.	CHAP.
Drawings	Handling and transportation- Installation plan	1	6/7A/8.1
Drawing	Electrical details	2	
Diagram	Electrical installation	2	
Drawing	Machine assembly	3	7B/8.3

4. DESCRIPTION OF THE MACHINE

4.1 DESCRIPTION OF THE MACHINE AND ITS COMPONENTS

The TA 400 cutting-off machine with circular blade for aluminium produced by MACC is made from a solid casting, carefully processed and provided with holes for fastening to a bench or pedestal. The upper surface is precision machined and is fitted with a housing for the attachment of the two vices used to clamp the material. The stop device allows the length required to be preset and a constant level of precision for repeated cuts. The blade-holding head is connected to the work bench by means of a joint which allows manual feed cutting movement. The coolant pump is also securely attached to the motor block. The main switch is located above the motor block. The control lever, fitted with an ergonomic hand-grip and blade activation button with safety release action, reduces fatigue during operation to a minimum. The blade is protected by a guard which in its turn protects the operator from ejected shavings. The machine is supplied with a set of service spanners.

4.2 INTENDED AND UNSUITABLE USES OF THE MACHINE

The TA 400 cutting-off machine with circular blade has been designed and built to cut bars, structural steel and aluminium pipes in accordance with the instructions contained in this manual.
Therefore, the cutting of other materials is not permitted: if the above recommendations are not observed, the machine could be damaged and the health and safety of the operator put at risk.
Cutting is not permitted, if the bar has not been first locked in the vice.

5. MAIN TECHNICAL DATA

Under no circumstances should the following data be altered, this is in order to protect the correct functioning of the machine and to avoid creating safety risks for the operator.

MOTOR Motor Power Motor revolutions	three-phase or single-phase KW 2,2 rpm 2800
CIRCULAR BLADE (SAW) Maximum diameter and thickness	 Diameter: 400 mm Thickness: 4
BLADE REVOLUTIONS per minute	rpm 3000
CUTTING ANGLE	45° right - 45° left
PIECE LOCKING VICE: MAX OPENING	mm 220
COOLANT TANK CAPACITY	litres 0,8
MACHINE WEIGHT	kg 160 - N 1570

6. HANDLING AND TRANSPORTATION

For safe handling and transportation use a lift truck for movement indoors or a bridge crane; in this case, also using cables fastened to the sling positions indicated on the drawing 1 Encl. 1. Keep the machine in its normal position and avoid turning it upside down. **If the machine is fastened to the pedestal, stability will be greatly reduced and therefore all the necessary measures should be taken to stop the machine from tipping over.**

All handling and transportation operations should be carried out by trained staff.

7. MACHINE INSTALLATION

A. MACHINE CHECK AND CONTROL LEVER ASSEMBLY

The machine should be checked to make sure that it has not been damaged during transportation and handling.
Control lever assembly (drawing.2-3 Encl. 1-2) : Fit the supplied head lever 48, into position 3 and fasten it by means of the nut . To fit the handle, connect the electric cable terminals 220 to the microswitch 218 and place it in the left second half of the handle as shown in draw.3 Encl.2. Then insert the button 222 and the lever 48. Complete the assembly using the screws 221 and then 219. Make sure that the cable is inserted into the lever slot, after having checked that there are no burrs or sharp edges in the slot.

B. FASTENING OF THE MACHINE

The machine will be able to operate in keeping with the technical parameters supplied by MACC if it is positioned correctly and fastened securely to the bench or the factory floor so that vibrations are minimal during operation . Consult drawing 2 TA 400 Installation plan Draw.5 Encl. 3.

C. ASSEMBLY OF CIRCULAR BLADE

For the assembly of the circular blade, remove the screw 27 (Draw. 5 Encl. 3), keeping the motor-blade block raised and rotate the mobile guard 11 backwards. Unscrew the screw 27 clockwise, withdraw the flange 28, insert the circular blade, making sure that the toothing faces the same direction as the arrow on the mobile guard. Then refit flange 28 and screw 27.

D. ELECTRICAL CONNECTION TO THE MAINS

Install a differential thermomagnetic switch with characteristics suited to the mains.

Make sure that the power supply voltage corresponds to the voltage on the motor plate. Connect the cable to the power supply line observing the colour codes of the individual wires, pay particular attention to the earth wire. Connect the machine, make sure that the rotation of the circular blade is in the direction shown by the arrow on the guard.

E. CUTTING COOLANT

To lubricate the cut, fill the tank with Diesel oil.

8. MACHINE START UP AND OPERATION

8.1 DEVICES AND THEIR LOCATION

(The location of the devices described is shown on the TA 400 installation plan Draw.2 Encl.1)

Code	203	CHANGEOVER SWITCH / MAIN SWITCH
Code	218	START-STOP MICROSWITCH: situated inside the handle located at the end of the control lever and has safety release action.
Code	208	EMERGENCY STOP
Code	55	BAR-STOP
Code	48	CONTROL LEVER WITH HANDLE

8.2 TOOLS SUPPLIED

1 Allen wrench size 3
1 Allen wrench size 4
1 Allen wrench size 5
1 Allen wrench size 6
1 Allen wrench size 8
1 Allen wrench size 14

8.3 OPERATION

CHECKS TO CARRY OUT BEFORE EACH CUT

A. Make sure that the circular blade is fastened securely by means of screw 27 (DRAW.5 ENCL.3)
B. Check that the hand indicates the required cutting angle (vice scale)
C. Make sure that the piece to be cut is adequately secured in the vice.
F. Make sure that the is circulating in the machine.

CUTTING OPERATION

A. Before starting to cut, if the cutting inclination is not as required, correct it or change it by pulling the knob 24 and turning the rotating plate 2 until the required position is reached. If the position is not one of the normal set positions, fasten the rotating plate using the rotating plate pin knob 100.
B. Clamp the piece to be cut by means of the handwheel 21 (DRAW.2 ENCL.1), turn the switch 203, take hold of the handle 78 located at the end of the head lever and press button 218. The blade will now start turning.
C. Position the blade carefully on the piece to be cut. Then increase the pressure in order to accelerate the cutting operation without using excessive force. To make a series of cuts, position the bar-stop 55 at the size required. Fix it into position by using the knob 24 .
D. To replace the circular blade carry out the same operations used to assemble the circular blade. (chapter 7c).

We strongly discourage the use of blades with ruined or insufficiently sharp cutting edges

8.4 SPECIAL SAFETY CHECKS

A. Before using the machine, check carefully that the safety devices are in good working order, that the mobile parts are not blocked, that no parts are damaged and that all the components are installed correctly and are functioning properly.

B. Make sure, before operating the machine, that the screws of the guards and other protective devices are adequately secured, especially the screws on the circular blade guard and the rotation levers of the circular blade mobile guard.

C. Check that the safety microswitches and the emergency button are functioning correctly. Test them during a loadless machine cycle.

D. Pay attention to environmental conditions. Do not expose the machine to rain; to not use it in damp environments, position the machine on a clean dry floor that has no oil or grease stains.

E. Before using the machine, the operator should make sure that all tools and service spanners used for maintenance or adjustment have been removed.

8.5 GENERAL SAFETY RULES

A. Wear appropriate clothing. The operator's clothing should not be loose or dangling nor should it have parts which could easily get caught. Sleeves should contain elastic.
Belts, rings or chains should not be worn. Long hair should be kept in a net.
B. Avoid unstable operating positions. Find a safe and evenly balanced position to operate the machine.
C. Keep the work area tidy, untidiness increases the risk of accidents.
D. Do not use the power supply cable to disconnect the plug from the socket. Protect the cable from high temperatures, oil or sharp edges. For outdoor use, only use extension cables which are in line with current regulations.

8.6 MEASURES TO PREVENT RESIDUAL RISKS

A. The removal of guards and tampering with the safety devices is strictly forbidden.
B. Gloves should always be worn.
C. Standard work clothing should be used and kept closed and should not have flapping parts.
D. The machine should not be cleaned with liquids under pressure.
E. In the event of fire, extinguishers should not be used unless they are the powder type. The electric power supply to the machine should always be disconnected in these circumstances.
F. Do not insert foreign bodies into the motor cover and to not supply the machine with voltage by tampering with the safety microswitches or main switch.

G. Take the necessary precautions to avoid the machine being started by other people during loading, adjustment, piece changing or cleaning.

Safety, Guidance, Notice Labels on the Machine





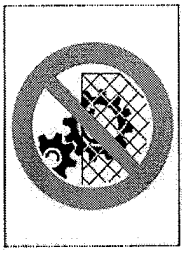

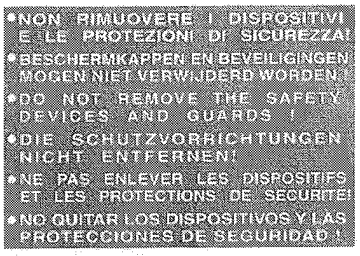

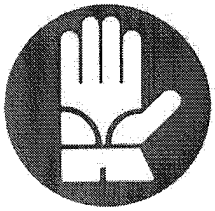

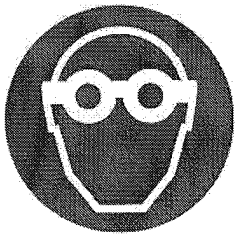

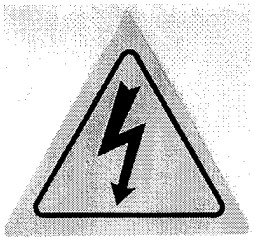

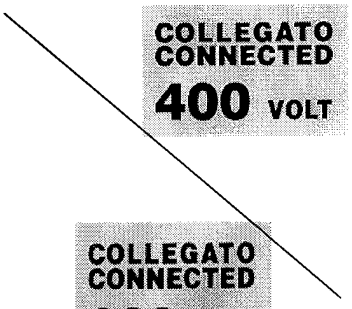

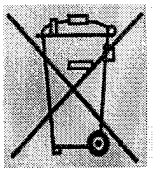



9. MAINTENANCE AND REPAIRS

9.1 GENERAL SAFETY MEASURES

A. Lockable main switch. Open the padlock in the event of machine failure or replacement of the circular blade. The padlock key should be entrusted to a responsible person.

B. Before carrying out any work on electrical equipment, remove the power supply plug from the control panel (disconnect voltage).

C. Only use cables to supply power, which have a cross-section suited to the power of the machine.

D. Opening key. The keys of the machine should be kept by authorized personnel. Do not leave the keys for doors which provide access to the hydraulic or electrical parts or keys to lockable switches in easy of reach of unauthorized personnel.

E. Repairs should only be carried out by authorized personnel. Only spare parts made by the original manufacturer should be used, otherwise these could cause damage or injury.

9.2 MAINTENANCE

To allow the machine to work properly and to prevent failures or problems, the machine should be kept clean.

10. INFORMATION ON ENVIRONMENTAL NOISE

An environmental noise test carried out on the TA 400 cutting-off machine with circular blade, identical to the machine to which these operation instructions refer, has given the following results:

ACOUSTIC RADIATION PRESSURE

1. L_{Aeq} = 86.8 dB (A)
2. L_{peak} = 97.3 dB (the maximum acceptable value is 140 dB).
3. The level of background noise has no influence = 48.5-54.2 dB (A).

11. LAYING OFF AND DISMANTLING

11.1 LAYING OFF

If the machine is to be laid off or left idle for a long period, the following operations must be carried out:

1. Disconnect the machine from the electricity mains.
2. Empty oil from the gear box and cooling liquid from its tank
3. Clean carefully the machine by getting rid of all traces of grease, especially on the worked parts that must be protected with anti-oxidants.
4. Cover the machine with a sheet, preferably not plastic as it can cause rust due to the humidity condensation.
5. Store the machine in a closed, dust-free place.

11.2 DISMANTLING

If the machine must be definitively dismantled, its components must be sub-divided for the purpose of a possible recycle of the materials and for the environment safety. The following table is given for your guidance:

Steel	**Electrical Components**	**Light alloy**	**Cast iron**	**Bronze Copper**	**Plastic and rubber**	**Various**
Flanges and pins	Motors winding	Gear boxes	Structural parts	Bushings	Seals	
Rollers	Push button and Control system (relais-transformer)	Cylinders			Electrical box	
Spring					Belt	

12. LIST OF SPARE PARTS

POS.	DESCRIPTION	CODE	POS.	DESCRIPTION	CODE
1	Bench	058/11	57	Roller arm pin	057/14
2	Rotating plate	056/11	58	Roller	049/04
3	Head	003/11	59	Divider plate	044/11
4	Rotating arm support	004/11	60		
5	Rotating arm	005/11	61	HSHC screw M6x10 DIN 912	
6	Counter-vice	006/11	62	HSHC screw M6x10 DIN 912	
7	Disk guard	007/11	63	HSHC screw M6x10 DIN 912	
8			64	Hexagon soket grub screw with cone point M8x25 DIN 914	
9	Bearing stop flange	009/11	65	HSHC screw M8x20 DIN 912	
10	Pump supporting flange	010/11	66	HSHC screw M8x25 DIN 912	
11	Movable blade cover	011/11	67	HSHC screw M10x30 DIN 912	
12	Jaw support	012/11	68	Handwheel D.40 4L M8x20 (no.2)	077/25
13	Jaw	013/11	69	HSHC screw M6x20 DIN 912	
14	Barrel support	014/11	70	HSFHC screw M8x25 DIN 5933	
15	Vice cylinder	015/11	71	HSBH screw M4x8 ISO 7380	
16			72	HH screw M8x25 DIN 933	
17			73	HH screw M10x30 DIN 933	
18	Square nut	018/11	74	HH screw M10x30 DIN 933	
19			75	Belt SPZ 1037	070/11
20			76	Hexagon socket grub screw with cone point M8x16 DIN 914	
21			77	Hexagon socket grub screw full dog point M8x12 DIN 915	
22	Guide barrel rotating plate	022/11	78	Head lever handle	046/05
23	Positioning pin rotating plate	023/11	79	Hexag. nut M8 medium DIN 934	
24	PTirante con boccola L.72 M10	103/11	80	Hexag. lock nut M10 DIN 936	
25	Pin return spring	025/11	81	Hexag. lock nut M16 DIN 936	
26	Disk shaft	026/11	82	Hexag. nut M20x1,5 UNI 5589	
27	Disk screw	018/05	83	Plain washer for M6 DIN 125/A	
28	Disk flange	028/11	84	Plain washer for M8 DIN 125/A	
29	Shaft locking pin	029/11	85	Plain washer for M12 DIN 125/A	
30	Belt guard	030/11	86	HSHC screw M6x12 DIN 912	
31	Belt guard cover	031/11	87		
32	Roller arm support	081/11	88		
33	Head pin	033/11	89	Parallel pin D.6x24 DIN 6325	
34	Self locking nut M8		90	Parallel pin D.6x30 DIN 6325	
35	Shaft sleeve	035/11	91	Parallel pin D.6x40 DIN 6325	
36	Return spring	036/11	92	Key 8x7x40 DIN 6885	
37	Release knob	037/11	93		
38	Blade cover mobile rod	040/11	94	Bearing 6004 ZZ (no.2)	074/11
39	Mobile blade cover fastening rod	039/11	95	Bearing 6205 2RS	035/13
40	Plain washer for M6 DIN 125/A		96	Bearing 6206 2RS	073/11
41	Hexagon soket grub screw full dog point M10x40 DIN 915		97	HSHC screw M6x15 DIN 912	
42	Motor support	042/11	98		
43	Head pin	043/11	99	Hexagon socket grub screw with cone point M6x8 DIN 914	
44	Disk shaft pulley	064/11	100	Handwheel D.50 M10x50	067/11
45	Motor pulley	063/11	101		
46	Small disk guard	078/11	102		
47			103	Water hose coupling	
48	Head lever	023/03	104	Pump	041/05
49	Divider	033/06	105		
50	Rotating plate ring	050/11	106	Water house	
51	Pin		107		
52	Pin guard stud M12	071/11	108	Motor	
53	Handle L.90 M12 thread	075/11	109	Closing cover	
54	Bar stopping rod	031/05	110	Electric cable	
55	Bar stop	055/11	111	Release lever M12x85	008/11
56	Roller arm support	047/04	112	Hexag. lock nut M14 DIN 936	

113	Disk		199	Cover box Box gasket	067/90 067-A/90
114			200	Electrical box	066/90
115	Pin D.3x18 DIN 1481		201	Plate	069/90
116	Hexagon socket grub screw with cone point M6x16 DIN 914		202	Omega raceway	046/90
117	HH screw M10x40 DIN 933		203	Changeover switch (3F)	011/90
118	Plain washer for M10 DIN 125/A		203	Main ON/OFF switch (1F)	001/90
119	Snap ring D.52 E DIN 472		204	RH screw M4x14 DIN 7981	291/95
120	Ball D.6		205	HSHC screw M4x6 DIN 912	120/95
121	Bench tap	042/05	206		
122	HSHC screw M4x6 DIN 912		207	Fitting PG13,5	215/90
123	HH screw M10 DIN 933		208	Emergency button	085/90
124	Snap ring D.25 E DIN 471		209	TBEI screw M4x6 ISO 7380	280/95
125	Snap ring D.45 E DIN 471		210	Remote controlled switch	032/90
126	Hexagon socket grub screw with flat end M10x50 DIN 913		211	Thermal relay	053/90
127	Hexag. lock nut M10 DIN 936		212		
128	Container	065/11	213		
129	Aluminium plate	038/11	214	RH screw M4x14 DIN 7981	291/95
130	HSFHC screw M4x10 DIN 5933		215		
			216		
			217	Transformer 20 VA	092/90
			218	Micro switch of handle	028/90
			219	HSFHC screw M4x8 DIN 7991	255/95
			220	Electrical cable 2x1	003/77
			221	RH screw M2,9x13 DIN 7981	294/95
			222	Button	046/05

CAPACITA' DI TAGLIO - CUTTING CAPACITY

CAPACITA' DI TAGLIO - CUTTING CAPACITY - CAPACITE DE COUPE SCHNITTKAPAZITAET - CAPACIDAD DE CORTE	●	○	□	▬
90°	60	140	110 x 110	180 x 100
45°	60	130	100 x 100	150 x 100

SCELTA DEL DISCO - BLADE SELECTION

Diametro - Diameter Diametre - Durchmesser		200	225	250	275	300	315	350
Spessore - Thickness Epaisseur - Dicke		1.8	1.8	2	2.5	2.5	2.5	3
b=10-80 g=<2	t	3	3	3	3	3	3	3
	z	200	230	250	280	300	320	350
b=10-80 g=2-4 d=10-18	t	5	5	5	5	5	5	5
	z	130	140	160	170	190	200	220
b=20-80 g=4-10 d=18-30	t	8	8	8	8	8	8	8
	z	80	90	100	110	120	120	140
d=30-40	t	10	10	10	10	10	10	10
	z	60	70	80	90	90	100	110
d>40	t	/	/	/	12	12	12	12
	z	/	/	/	70	80	80	90

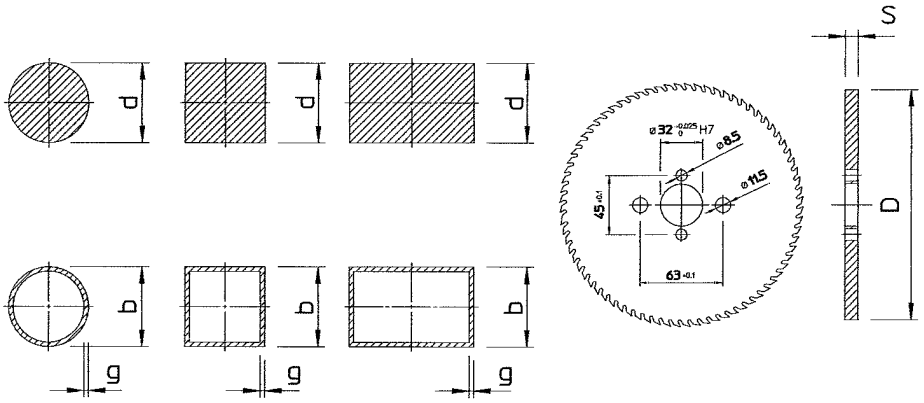

Si garantisce il funzionamento ottimale della vite-corona utilizzando dischi con fori di trascinamento.

Best performance of worm screw worm wheel gearing is guaranteed when circular saw blades with drawing-holes are used.

Nous garantissons le bon fonctionnement de la vis et couronne seulement si l'on emploie des fraise-scies avec trous d'entrainement.

Die verwendung von Sageblattern mit Mitnehmerlochern sichern den guten Betrieb der Schnecke und des Scheckenkranzes.

b= diametro esterno/altezza (tubi) - outside diameter/height (pipe)
diametre extérieur/hauteur

d= diametro/altezza (pieni) - diameter/height (solid)
diamètre/hauter (plein) - durchmesser/hohe (voll)

g= spessore del tubo - pipe thickness
epaisseur du tube - rohrdicke

t= passo dentatura - toothing pitch
pas denture - entfernung verzahnung

z= numero di denti - number of teeth
numero de dents - zahnnummer

DIMENSIONI D'INGOMBRO E INSTALLAZIONE

Overall dimensions and installation
Dimensions hors-tout et installation
Aussenabmessungen und installation
Dimensiones máximas extremas e instalación

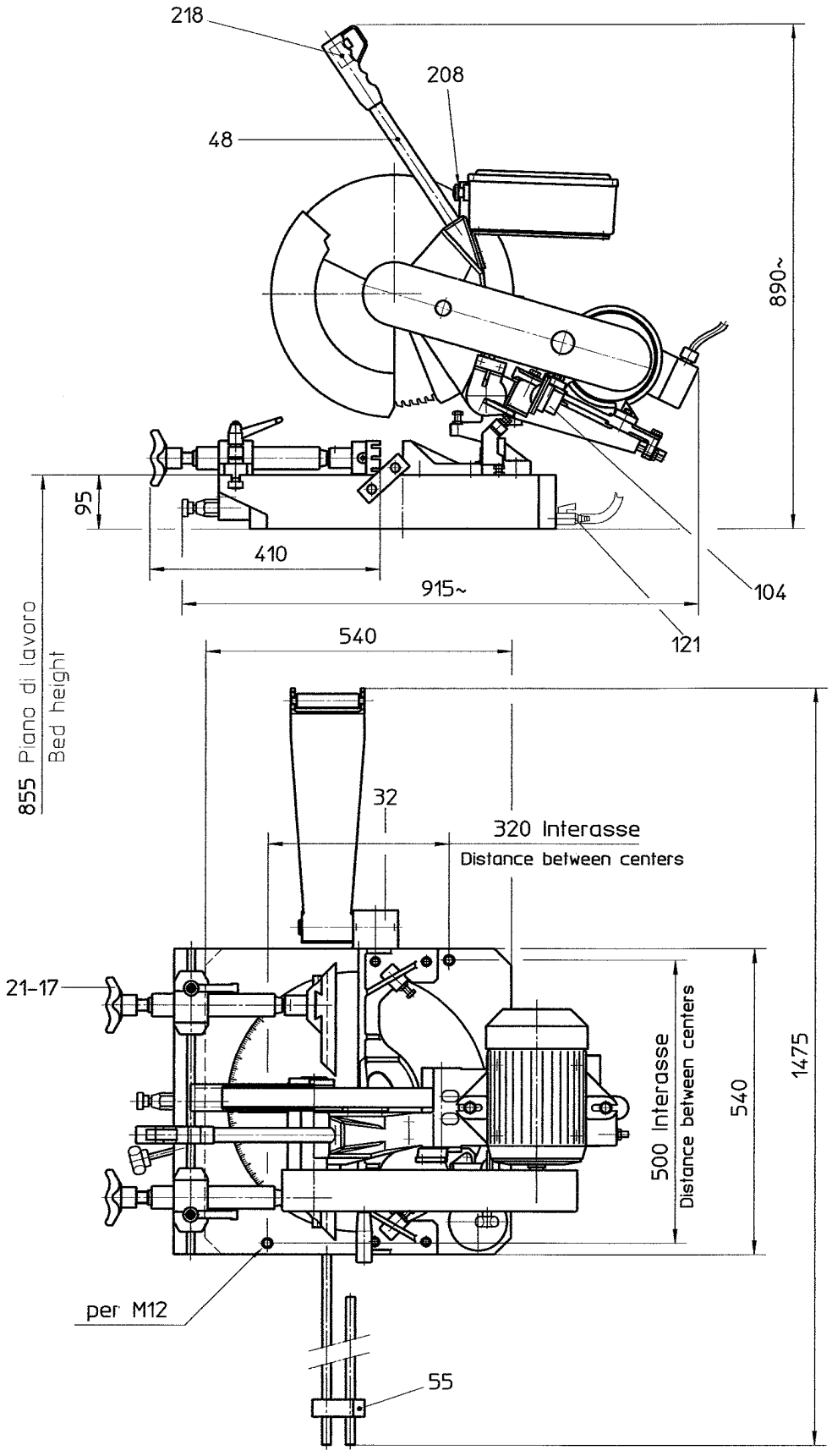

Allegato / Encl. 1 - Dis. / Draw. 2

MOVIMENTAZIONE E TRASPORTO

Handling and transportation
Manutention et transport
Handhabung und transport
Movilización y transporte

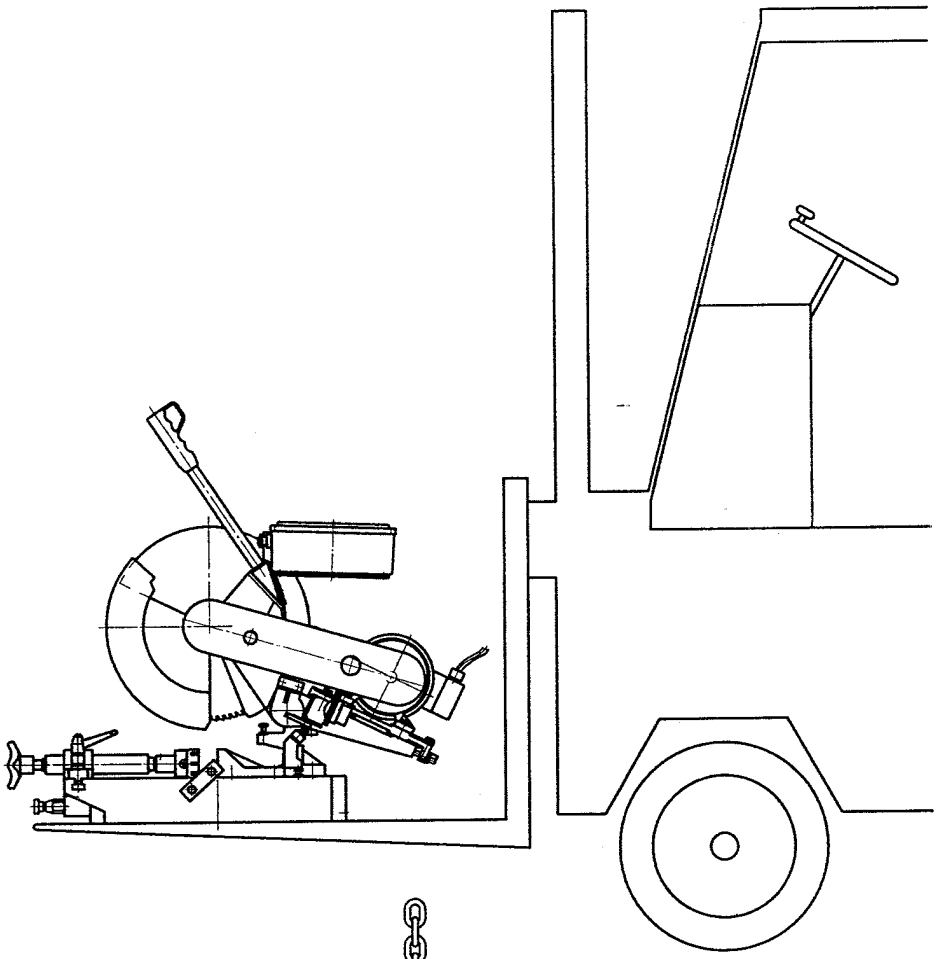

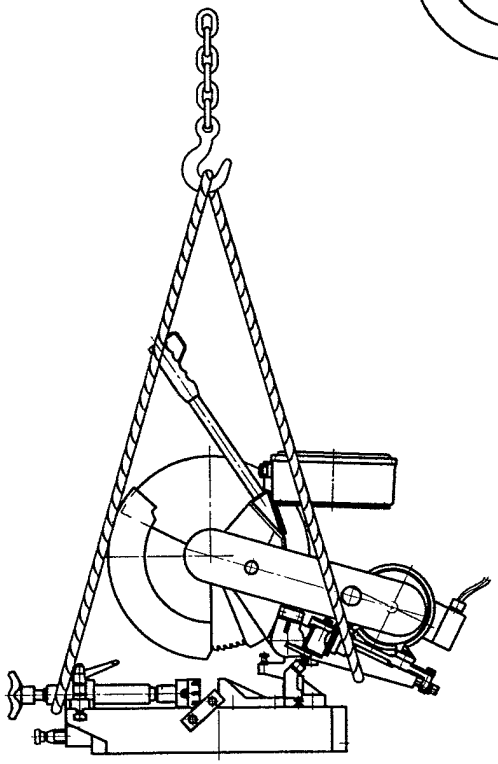

Allegato / Encl. 1 - Dis. / Draw. 1

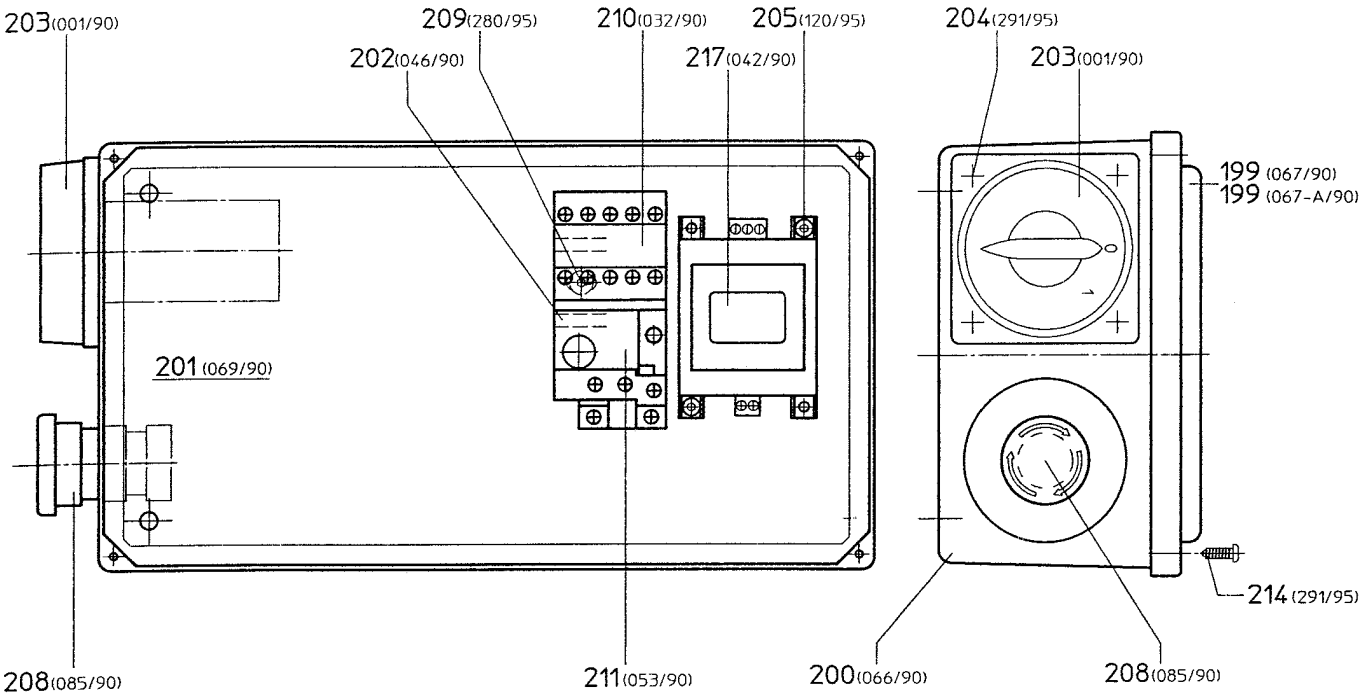

Cassetta Impianto elettrico

Electric Box

Boîte Electríque

Schaltkasten

Caja Electríca

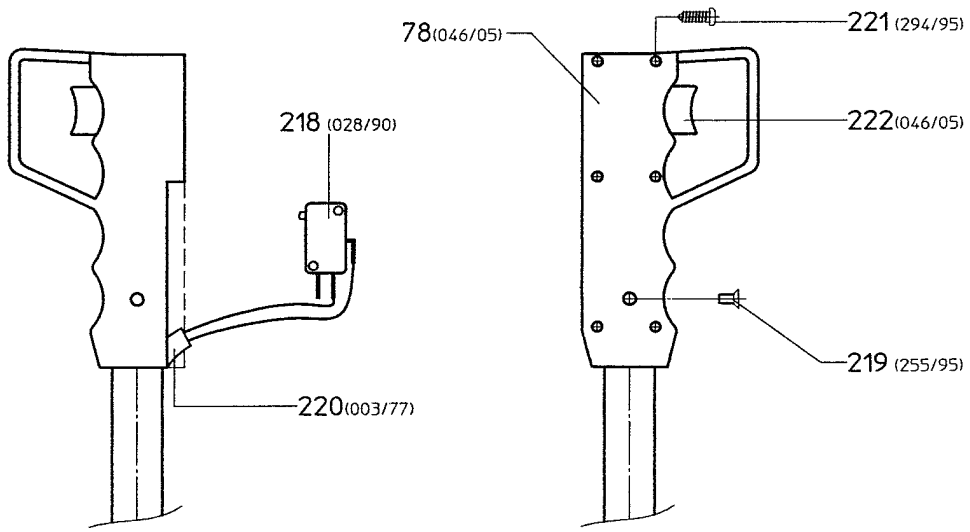

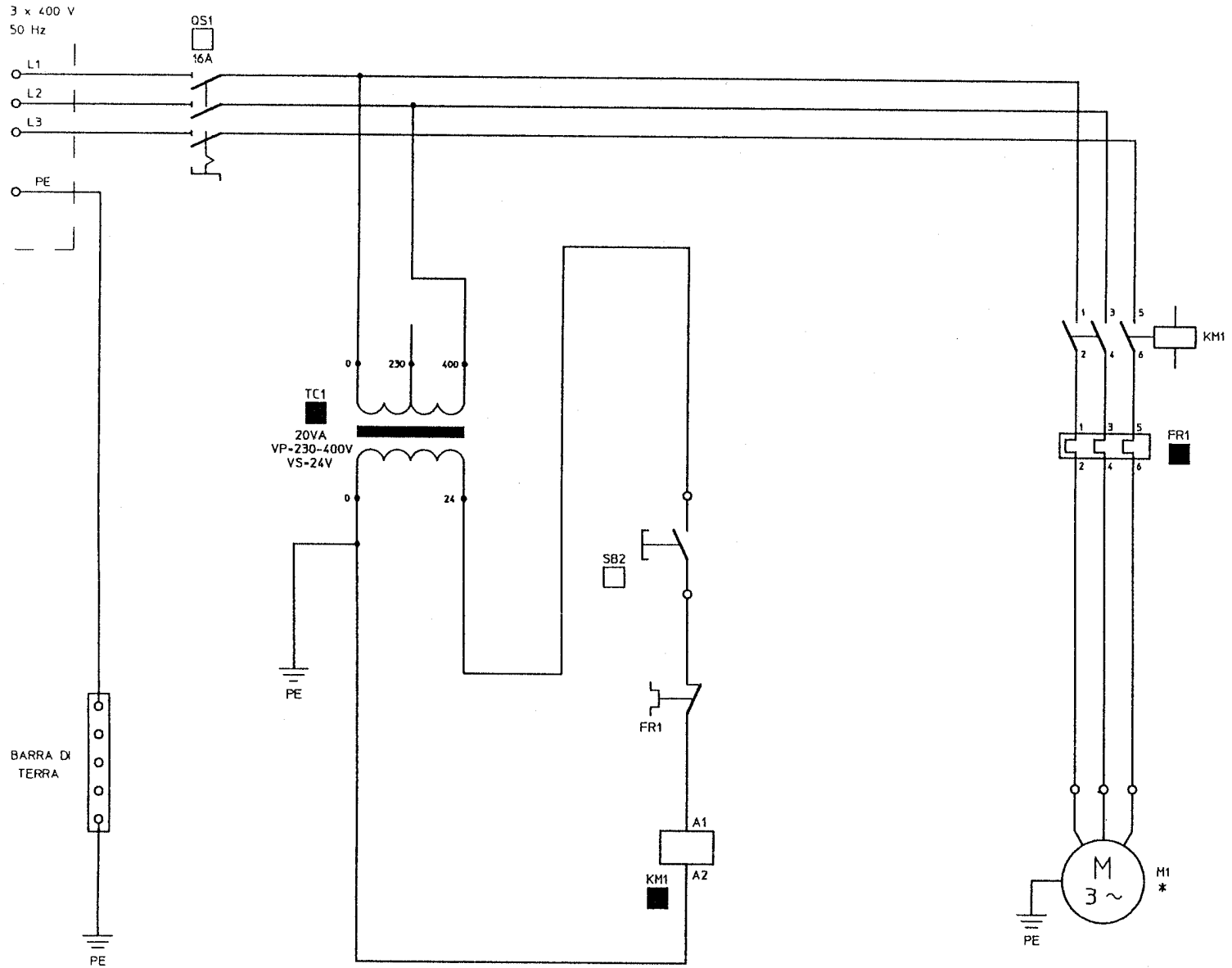

M1 *	TA 400
MOTORE LAMA : RPM 2810	
HP 3 - Kw 2.2	
A 13.8/4.85 - Volt 230/400 50 Hz	

QS1	INTERRUTTORE GENERALE
SB2	MICROINTERRUTTORE MANIGLIA
KM1	TELERUTTORE
FR1	RELE' TERMICO

Rev.	Modificato	C./Appr.	Data	Descrizione

DESCRIZIONE: Schema Elettrico

Data 21-06-04

Firma *PaoloNXV*

Contr./Appr.

MACC Schio

Modello: TRONCATRICE

Macchina: TA 400

N° Schema / T

Revisione

Foglio 1 di 1

V400 / 50 3F (TIPO VECCHIO)

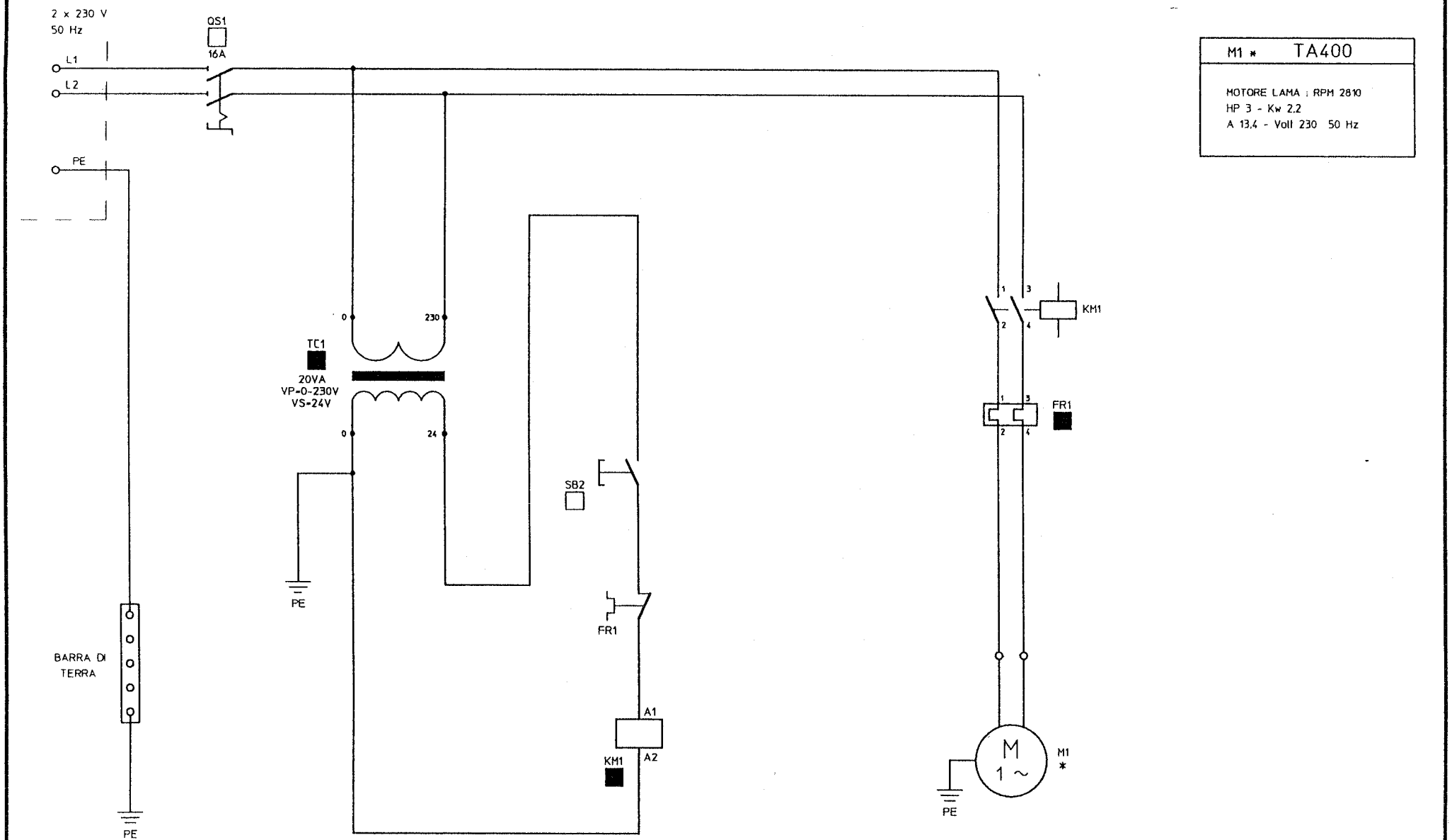

M1 *	TA400
MOTORE LAMA : RPM 2810 HP 3 - Kw 2.2 A 13,4 - Volt 230 50 Hz	

QS1	INTERRUTTORE GENERALE
SB2	MICROINTERRUTTORE MANIGLIA
KM1	TELERUTTORE
FR1	RELE' TERMICO

Rev.	Modificato	C./Appr.	Data	Descrizione

DESCRIZIONE: Schema Elettrico

Data 21-06-04

Firma *PaoloNXV*

Contr./Appr.

MACC Schio

Modello: TRONCATRICE

Macchina: TA 400

N° Schema / T

Revisione

Foglio 1 di 1

V220 / 50 1F (TIPO VECCHIO)

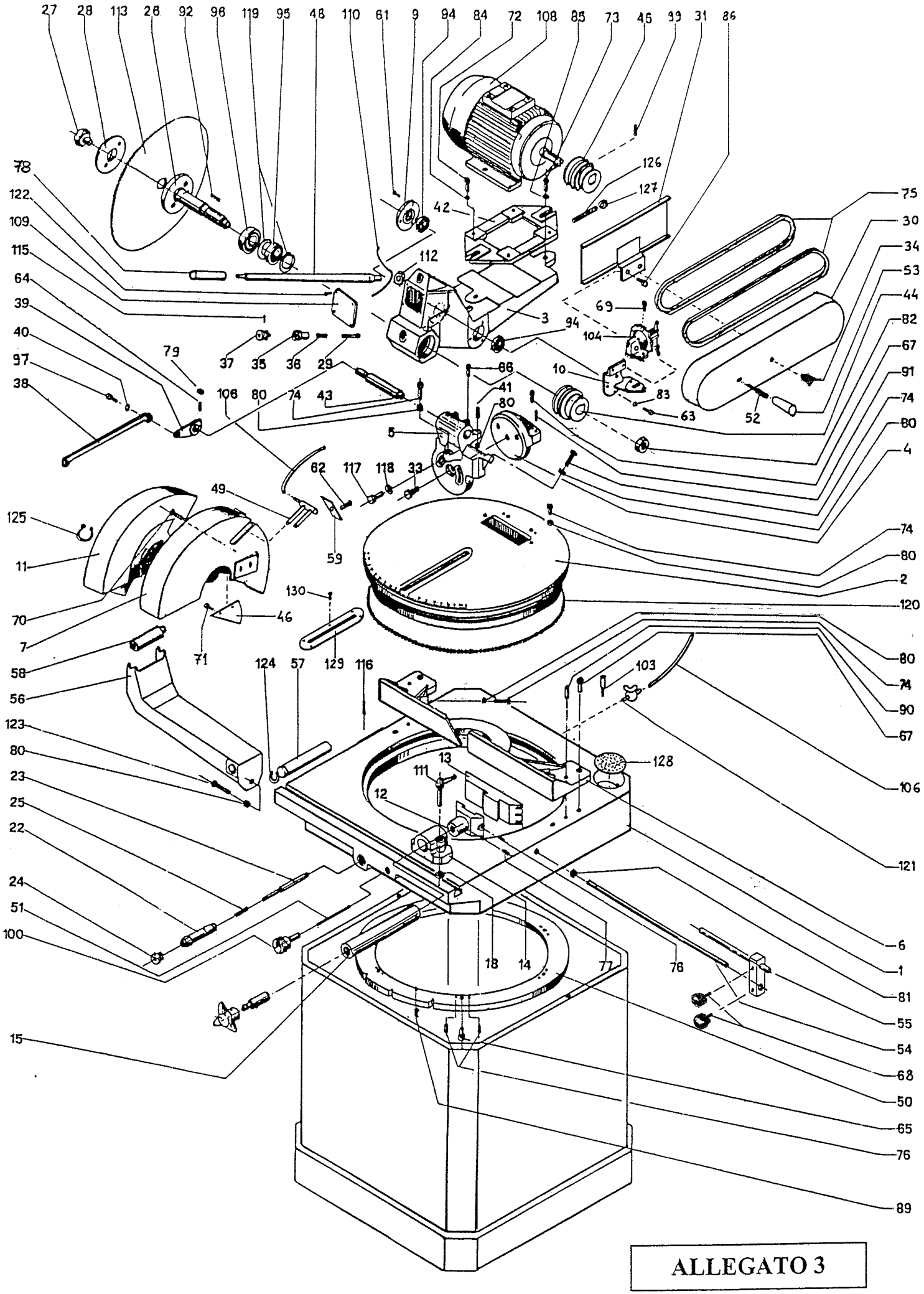
27 28 113 26 92 96 119 95 48 110 61 9 94 84 72 108 85 73 46 99 31 86
78
122
109
115
64
39
40
97
38
79
37 35 36 29
106 80 74 43
112
42
126
127
3
94
69
104
10
83
63
52
75
30
34
53
44
82
67
91
74
80
4
66
41
80
5
62 117 118 33
49
59
125
11
70
7
58
56
46
71
130
129
124 57 116
103
123
80
23
25
22
24
51
100
15
13
111
12
128
18 14 77 76
74
80
2
120
80
74
90
67
106
121
6
1
81
55
54
68
50
65
76
89

ALLEGATO 3