SEGATRICE A NASTRO PER METALLI FERROSI
BAND SAW FOR FERROUS METALS
BANDSAEGEMASCHINE FÜR EISENMETALLE
SCIE A RUBAN POUR METAUX FERREUX
SIERRA DE CINTA PARA METALES FERROSOS
ЛЕНТОЧНЫЙ РАСПИЛОВОЧНЫЙ СТАНОК ДЛЯ МЕТАЛЛОВ

MANUALE DI ISTRUZIONI PER L'USO - INSTRUCTION MANUAL FOR OPERATION
BETRIEBSANLEITUNG - MANUEL D'INSTRUCTIONS POUR L'EMPLOI
MANUAL DE INSTRUCCIONES DE USO
РУКОВОДСТВО ПО ЭКСПЛУАТАЦИИ И ТЕХОБСЛУЖИВАНИЮ

COSTRUTTORE:
MANUFACTURER:
ERBAUER:
CONSTRUCTEUR:
CONSTRUCTOR:
ИЗГОТОВИТЕЛЬ:

MACC s.r.l. SCHIO (VI) - ITALY

MODELLO:
MODEL:
MODELL:
MODELE:
MODELO:
МОДЕЛЬ:

SPECIAL 391 SVG

MATRICOLA:
SERIAL NUMBER:
KENNNUMMER:
MATRICULE:
MATRICULA:
СЕРИЙНЫЙ НОМЕР:

ANNO DI COSTRUZIONE:
YEAR OF CONSTRUCTION:
BAUJAHR:
ANNEE DE CONSTRUCTION:
AÑO DE COSTRUCCION:
ГОД ИЗГОТОВЛЕНИЯ:

2023

CE

DICHIARAZIONE DI CONFORMITA' 'CE'
CERTIFICATE OF CONFORMITY 'EEC'
KONFORMITÄTSBESCHEINIGUNG 'EWG'
DECLARATION DE CONFORMITE 'CE'
DECLARACION DE CONFORMIDAD 'CE'
ДЕКЛАРАЦИЯ О СООТВЕТСТВИИ 'CE'

MACC Costruzioni Meccaniche s.r.l. - Via Lago di Albano, 10 - 36015 Schio (VI) Italy
Tel.: 0445/575005 Fax: 0445/575006 Web site: www.macc.it E-mail: info@macc.it

- **Dichiara, sotto la propria responsabilità, che la macchina nuova descritta in appresso:**
- **Declares, by its own undertaking, that the new machine described below:**
- **Erklärt auf eigene Verantwortung, daß die nachstehend beschriebene neue Maschine:**
- **Déclare sous sa propre responsabilité, que la machine neuve décrite de suite:**
- **Declara, bajo la propia responsabilidad, que la nueva màquina descripta a continuaciòn:**
- **Заявляет под личную ответственность, что описанная новая машина под названием:**

SEGATRICE A NASTRO PER METALLI
BAND SAW MACHINE FOR METALS
BANDSAEGEMASCHINE FÜR EISENMETALLE
SCIE A RUBAN POUR METAUX
SIERRA DE CINTA PARA METALES
ЛЕНТОЧНЫЙ РАСПИЛОВОЧНЫЙ СТАНОК ДЛЯ МЕТАЛЛОВ

TIPO - TYPE - TYP - TYPE – TIPO - ТИП

SPECIAL 391 SVG

MATRICOLA - SERIAL NUMBER - KENNNUMMER - MATRICULE – MATRICULA - СЕРИЙНЫЙ НОМЕР

_____

ANNO DI COSTRUZIONE – YEAR OF CONSTRUCTION - BAUJAHR – ANNEE DE CONSTRUCTION
AÑO DE COSTRUCCION - ГОД ИЗГОТОВЛЕНИЯ

2023

- E' CONFORME ALLA DIRETTIVA MACCHINE 2006/42/CE, ALLA DIRETTIVA COMPATIBILITA' ELETTROMAGNETICA 2014/30/UE ED ALLA DIRETTIVA BASSA TENSIONE 2014/35/UE.

- IS IN COMPLIANCE WITH THE 2006/42/EEC MACHINERY DIRECTIVE, 2014/30/UE DIRECTIVE ON ELECTROMAGNETIC COMPATIBILITY, 2014/35/UE LOW VOLTAGE DIRECTIVE.

- DEN NORMEN BEZÜGLICH DER MASCHINEN-RICHTLINIE 2006/42/EWG, 2014/30/EWG RICHTLINIE ZUR ELEKTROMAGNETISCHEN KOMPATIBILITÄT, 2014/35/EWG RICHTLINIE FÜR NIEDERSPANNUNG ENTSPRICHT.

- EST CONFORME A LA DIRECTIVE MASCHINES 2006/42/CEE, 2014/30/CEE DIRECTIVE SUR LA COMPATIBILITÉ ÉLECTROMAGNÉTIQUE, 2014/35/CEE DIRECTIVE BASSE TENSION.

- HA SIDO FABRICADA CONFORME A LA DIRECTIVA MÁQUINAS 2006/42/CEE, 2014/30/CEE DIRECTIVA COMPATIBILIDAD ELECTROMAGNÉTICA, 2014/35/CEE DIRECTIVA BAJA TENSIÓN.

- ОТВЕЧАЕТ ТРЕБОВАНИЯМ ДИРЕКТИВЫ ПО МАШИНАМ 2006/42/CE, ДИРЕКТИВЫ ОБ ЭЛЕМКТРОМАГНИТНОЙ СОВМЕСТИМОСТИ 2014/30/CE И ДИРЕКТИВЫ О НИЗКОМ НАПРЯЖЕНИИ 2014/35/CE.

Nome della persona autorizzata a costituire il 'Fascicolo Tecnico' - Name of the person authorized to represent the 'Technical File' - Name der Person, auf die "Technical File" vertreten - Nom de la personne autorisée à représenter le 'dossier technique' Nombre de la persona autorizada para representar a la "Ficha Técnica" - Фамилия, имя лица, уполномоченного составить техническую документацию

Macc Costruzioni Meccaniche s.r.l.
MACC Costruzioni Meccaniche s.r.l. - Via Lago di Albano, 10 – 36015 Schio (VI) Italy Tel.: 0445/575005 Fax: 0445/575006

Nome del Rappresentante Legale - Name of the Legal Representative - Name des Gesetzlichen Vertreters
Nom du Représentant Légal - Apellido del Representante Legal - Фамилия, имя законного представителя:

Zanella Gianfranco
MACC Costruzioni Meccaniche s.r.l. - Via Lago di Albano, 10 – 36015 Schio (VI) Italy Tel.: 0445/575005 Fax: 0445/575006

Firma - Signature - Unterschrift - Signature - Firma - Подпись:

_____ _____ **Schio, 2023**

E' SEVERAMENTE VIETATO UTILIZZARE LA MACCHINA SENZA LIQUIDO DI TAGLIO.

IT IS STRICTLY FORBIDDEN TO USE THE MACHINE WITHOUT CUTTING FLUID.

ES IST STRENG VERBOTEN, DIE MASCHINE OHNE SCHNEIDFLÜSSIGKEIT IN BETRIEB ZU NEHMEN.

IL EST SEVEREMENT INTERDIT D'UTILISER LA MACHINE SANS LIQUIDE DE COUPE.

SE PROHÍBE TERMINANTEMENTE UTILIZAR LA MÁQUINA SIN LÍQUIDO DE CORTE.

É SEVERAMENTE PROIBIDO UTILIZAR A MÁQUINA SEM LÍQUIDO DE CORTE.

Категорчески запрещена эксплуатация машины без смазочно-охлаждающей жидкости



SISTEMA DI MICROLUBRIFICAZIONE: SE INSTALLATO SULLA MACCHINA, È OBBLIGATORIO L'USO DI MASCHERINA PROTETTIVA DELLE VIE AEREE. SI CONSIGLIA DI MANTENERE AREATO IL LOCALE.

MICRO-LUBRICATION SYSTEM: IF INSTALLED ON THE MACHINE, THE USE OF **PPE** (AIRWAYS PROTECTION MASK) IS NECESSARY. KEEP THE PLACE AERATED.

MIKRODOSIERGERÄT: FÜR MASCHINEN MIT MIKRODOSIERGERÄT IST ES STRIKT ERFORDERLICH EINE ATEMMASKE ZUM SCHUTZ DER ATEMWEGE ZU TRAGEN. BITTE DAS GERÄT NUR IN GUT BELÜFTETEN RÄUMEN ANWENDEN.

SYSTÈME DE MICRO-LUBRIFICATION: SI LE SYSTÈME EST INSTALLÉ SUR LA MACHINE, IL EST IMPÉRATIF DE PORTER UN MASQUE DE PROTECTION POUR PROTÉGER LES VOIES RESPIRATOIRES. LES LOCAUX DOIVENT ÉGALEMENT ÊTRE VENTILÉS.

SISTEMA DE MICROLUBRICACIÓN: SI ESTÁ INSTALADO EN LA MÁQUINA, ES OBLIGATORIO EL USO DE UNA MÀSCARA PROTECTORA DE LAS VÍAS RESPIRATORIAS. ES ACONSEJABLE MANTENER LA SALA VENTILADA.

SISTEMA DE MICRO-LUBRIFICAÇÃO: SE INSTALADO NA MÁQUINA, O USO DE UMA MÁSCARA PROTETORA DAS VIAS AÉREAS É OBRIGATÓRIO. É ACONSELHÁVEL MANTER O LOCAL VENTILADO.

СИСТЕМА МИКРОСМАЗКИ: ЕСЛИ СИСТЕМА УСТАНОВЛЕНА, ОБЯЗАТЕЛЬНО ИСПОЛЬЗОВАТЬ ЗАЩИТНУЮ МАСКУ И ПРОВЕТРИВАТЬ ПОМЕЩЕНИЕ.

Magyarul



Feleslegessé vált elektromos és elektronikus készülékek hulladékként való eltávolítása (Használható az Európai Unió és egyéb európai országok szelektív hulladékgyűjtési rendszereiben)

Ez a szimbólum a készüléken vagy a csomagolásán azt jelzi, hogy a terméket ne kezelje háztartási hulladékként. Kérjük, hogy az elektromos és elektronikai hulladék gyűjtésére kijelölt gyűjtőhelyen adja le. A feleslegessé vált termékének helyes kezelésével segít megelőzni a környezet és az emberi egészség károsodását, mely bekövetkezhetne, ha nem követi a hulladék kezelés helyes módját. Az anyagok, újrahasznosítása segít a természeti erőforrások megőrzésében. A termék újrahasznosítása érdekében további információért forduljon a lakhelyén az illetékesekhez, a helyi hulladékgyűjtő szolgáltatóhoz vagy ahhoz az üzlethez, ahol a terméket megvásárolta.

Česky



Nakládání s nepotřebným elektrickým a elektronickým zařízením (platné v Evropské unii a dalších evropských státech uplatňujících oddělený systém sběru)

Tento symbol umístěný na výrobku nebo jeho balení upozorňuje, že s výrobkem po ukončení jeho životnosti by nemělo být nakládáno jako s běžným odpadem z domácnosti. Místo toho by měl být odložen do sběrného místa, určeného k recyklaci elektronických výrobků a zařízení. Dodržením této instrukce zabráníte negativním dopadům na životní prostředí a zdraví lidí, které naopak může být ohroženo nesprávným nakládním s výrobkem při jeho likvidaci. Recyklováním materiálů, z nichž je vyroben, pomůžete zachovat přírodní zdroje. Pro získání dalších informací o recyklaci tohoto výrobku kontaktujte, prosím, místní orgány státní správy, místní firmu zabezpečující likvidaci a sběr odpadů nebo prodejnu, v níž jste výrobek zakoupili.

Slovensky



Likvidácia starých elektrických a elektronických zariadení (Platí v Európskej únii a ostatných európskych krajinách so zavedeným separovaným zberom)

Tento symbol na výrobku alebo obale znamená, že s výrobkom nemôže byť nakladané ako s domovým odpadom. Miesto toho je potrebné ho doručiť do vyhradeného zberného miesta na recykláciu elektrozariadení. Tým, že zaistíte správne zneškodnenie, pomôžete zabrániť potencionálnemu negatívnemu vplyvu na životné prostredie a ľudské zdravie, ktoré by v opačnom prípade hrozil pri nesprávnom nakladaní s týmto výrobkom. Recyklácia materiálov pomáha uchovávať prírodné zdroje. Pre získanie ďalších podrobných informácií o recyklácii tohoto výrobku kontaktujte prosím váš miestny alebo obecný úrad, miestnu službu pre zber domového odpadu alebo predajňu, kde ste výrobok zakúpili.

Türkçe



Eski Elektrikli & Elektronik Ekipmanların Atılması (Avrupa Birliği'nde ve ayrı toplama sistemlerine sahip diğer Avrupa ülkelerinde uygulanır)

Ürün veya ambalajı üzerinde bulunan bu sembol, bu ürünün bir ev atigi olarak muamele görmemesi gerektigini gösterir. Bunun yerine, elektrikli ve elektronik ekipmanlarin geri dönüsümü için mevcut olan uygun toplama noktasina teslim edilmelidir. Bu ürünün dogru sekilde atilmasini saglayarak, bu ürüne yanlis müdahale edilmesi sonucunda ortaya çikabilecek ve çevre ile insan sagligi üzerinde olumsuz etkide bulunabilecek durumlarin önlemesine yardimci olmus olursunuz. Malzemelerin geri dönüsümü, dogal kaynaklari korumamiza yardimci olacaktir. Bu ürünün geri dönüsümüyle ilgili daha fazla bilgi için, lütfen sehrinizde bulunan yerel ofisle, evsel atiklar toplama servisinizle veya bu ürünü satin aldiginiz magazayla temasa geçin.

Slovensko



Oddaja stare električne in elektronske opreme (veljavno v evropski uniji in ostalih evropskih državah s sistemom zbiranja ločenih odpadkov)

Če se na izdelku ali na njegovi embalaži nahaja ta simbol, pomeni, da z izdelkom ne smete ravnati enako kot z drugimi gospodinjskimi odpadki. Morate ga oddati na ustrezno zbirno mesto za recikliranje električne in elektronske opreme. S pravilno oddajo tega izdelka boste pomagali preprečiti negativne posledice na okolje in zdravje ljudi, do katerih bi prišlo v primeru neustreznega ravnanja ob odstranitvi tega izdelka. Recikliranje materiala bo pripomoglo k ohranjevanju naravnih virov. Podrobnejše informacije o recikliranju tega izdelka lahko dobite pri lokalni mestni upravi, službi oddajanja gospodinjskih odpadkov ali v trgovini, kjer ste izdelek kupili. Odpadno električno in elektronsko opremo lahko oddate brezplačno tudi distributerju neposredno ob dobavi električne oz. elektronske opreme.

Русский



Утилизация электрического и электронного оборудования (директива применяется в странах Евросоюза и других европейских странах, где действуют системы раздельного сбора отходов)

Данный знак на устройстве или его упаковке обозначает, что данное устройство нельзя утилизировать вместе с прочими бытовыми отходами. Его следует сдать в соответствующий приемный пункт переработки электрического и электронного оборудования. Неправильная утилизация данного изделия может привести к потенциально негативному влиянию на окружающую среду и здоровье людей, поэтому для предотвращения подобных последствий необходимо выполнять специальные требования по утилизации этого изделия. Переработка данных материалов поможет сохранить природные ресурсы. Для получения более подробной информации о переработке этого изделия обратитесь в местные органы городского управления, службу сбора бытовых отходов или в магазин, где было приобретено изделие.

Suomi



Käytöstä poistetun sähkö- ja elektroniikkalaitteen hävitys (Euroopan Unioni ja muiden Euroopan maiden keräysjärjestelmät)

Symboli, joka on merkitty Tuotteeseen tai sen pakkaukseen, osoittaa, että tätä tuotetta ei saa käsitellä talousjätteenä. Tuote on sen sijaan luovutettava sopivaan sähkö-ja elektroniikkalaitteiden kierrätyksestä huolehtivaan keräyspisteeseen. Tämän tuotteen asianmukaisen hävittämisen varmistamisella autetaan estämään sen mahdolliset ympäristöön ja terveyteen kohdistuvat haittavaikutukset, joita voi aiheutua muussa tapauksessa tämän tuotteen epäasianmukaisesta jätekäsittelystä. Materiaalien kierrätys säästää luonnonvaroja. Tarkempia tietoja tämän tuotteen kierrättämisestä saa paikallisesta kunnantoimistosta.

Dansk



Bortskaffelse af elektrisk og elektronisk udstyr (gælder i EU og andre europæiske lande med egne indsamlingssystemer)

Hvis dette symbol findes på produktet eller på emballagen betyder det, at det pågældende produkt ikke må bortskaffes som almindeligt husholdningsaffald. Du skal i stedet aflevere det på et indsamlingssted, så det elektriske og elektroniske udstyr kan blive genbrugt. Når du bortskaffer produktet korrekt, hjælper du med at forhindre de mulige negative påvirkninger af miljøet eller sundheden, der kan opstå, hvis produktet bortskaffes på upassende vis. Genbrug af materialer er med at bevare naturens ressourcer. Yderligere oplysninger om genbrug af produktet fås på kommunen, på genbrugscentralen eller i den butik, hvor du købte produktet.

Português



Tratamento de Equipamentos Eléctricos e Electrónicos no final da sua vida útil (Aplicável na União Europeia e em países Europeus com sistemas de recolha selectiva de resíduos)

Este símbolo, colocado no produto ou na sua embalagem, indica que este não deve ser tratado como resíduo urbano indiferenciado. Deve sim ser colocado num ponto de recolha destinado a resíduos de equipamentos eléctricos e electrónicos. Assegurando-se que este produto é correctamente depositado, irá prevenir potenciais consequências negativas para o ambiente bem como para a saúde, que de outra forma poderiam ocorrer pelo mau manuseamento destes produtos. A reciclagem dos materiais contribuirá para a conservação dos recursos naturais. Para obter informação mais detalhada sobre a reciclagem deste produto, por favor contacte o município onde reside, os serviços de recolha de resíduos da sua área ou a loja onde adquiriu o produto.

Ελληνικά



Αποκομιδή Παλαιού Ηλεκτρικού & Ηλεκτρονικού Εξοπλισμού(Ισχύει στην Ευρωπαϊκή Ένωση και άλλες Ευρωπαϊκές χώρες με ξεχωριστά συστήματα περισυλλογής)

Το σύμβολο αυτό επάνω στο προϊόν ή στη συσκευασία του σημαίνει ότι το προϊόν δεν πρέπει να πεταχτεί μαζί με τα οικιακά απορρίμματα αλλά πρέπει να παραδοθεί σε ένα κατάλληλο σημείο συλλογής ηλεκτρολογικού και ηλεκτρονικού υλικού προς ανακύκλωση. Με το να βεβαιωθείτε ότι το προϊόν πετάχτηκε σωστά, βοηθάτε στην πρόληψη πιθανών αρνητικών επιπτώσεων στο περιβάλλον και την υγεία. Η ανακύκλωση των υλικών θα βοηθήσει στην εξοικονόμηση φυσικών πόρων. Για περισσότερες πληροφορίες σχετικά με την ανακύκλωση αυτού του προϊόντος, παρακαλούμε επικοινωνήστε με τις υπηρεσίες καθαριότητας του δήμου σας ή το κατάστημα όπου αγοράσατε το προϊόν.

English



Disposal of Old Electrical & Electronic Equipment (Applicable in the European Union and other European countries with separate collection systems)

This symbol on the product or on its packaging indicates that this product shall not be treated as household waste. Instead it shall be handed over to the applicable collection point for the recycling of electrical and electronic equipment. By ensuring this product is disposed of correctly, you will help prevent potential negative consequences for the environment and human health, which could otherwise be caused by inappropriate waste handling of this product. The recycling of materials will help to conserve natural resources. For more detailed information about recycling of this product, please contact your local city office, your household waste disposal service or the shop where you purchased the product.

Français



Traitement des appareils électriques et électroniques en fin de vie (Applicable dans les pays de l'Union Européenne et aux autres pays européens disposant de systèmes de collecte sélective)

Ce symbole, apposé sur le produit ou sur son emballage, indique que ce produit ne doit pas être traité avec les déchets ménagers. Il doit être remis à un point de collecte approprié pour le recyclage des équipements électriques et électroniques. En s'assurant que ce produit est bien mis au rebus de manière appropriée, vous aiderez à prévenir les conséquences négatives potentielles pour l'environnement et la santé humaine. Le recyclage des matériaux aidera à conserver les ressources naturelles. Pour toute information supplémentaire au sujet du recyclage de ce produit, vous pouvez contacter votre municipalité, votre déchetterie ou le magasin où vous avez acheté le produit.

Deutsch



Entsorgung von gebrauchten elektrischen und elektronischen Geräten (Anzuwenden in den Ländern der Europäischen Union und anderen europäischen Ländern mit einem separaten Sammelsystem für diese Geräte)

Das Symbol auf dem Produkt oder seiner Verpackung weist darauf hin, dass dieses Produkt nicht als normaler Haushaltsabfall zu behandeln ist, sondern an einer Annahmestelle für das Recycling von elektrischen und elektronischen Geräten abgegeben werden muss. Durch Ihren Beitrag zum korrekten Entsorgen dieses Produkts schützen Sie die Umwelt und die Gesundheit Ihrer Mitmenschen. Umwelt und Gesundheit werden durch falsches Entsorgen gefährdet. Materialrecycling hilft den Verbrauch von Rohstoffen zu verringern. Weitere Informationen über das Recycling dieses Produkts erhalten Sie von Ihrer Gemeinde, den kommunalen Entsorgungsbetrieben oder dem Geschäft, in dem Sie das Produkt gekauft haben.

Español



Tratamiento de los equipos eléctricos y electrónicos al final de su vida útil (Aplicable en la Unión Europea y en países europeos con sistemas de recogida selectiva de residuos)

Este símbolo en su equipo o su embalaje indica que el presente producto no puede ser tratado como residuos domésticos normales, sino que deben entregarse en el correspondiente punto de recogida de equipos eléctricos y electrónicos. Asegurándose de que este producto es desechado correctamente, Ud. está ayudando a prevenir las consecuencias negativas para el medio ambiente y la salud humana que podrían derivarse de la incorrecta manipulación de este producto. El reciclaje de materiales ayuda a conservar las reservas naturales. Para recibir información detallada sobre el reciclaje de este producto, por favor, contacte con su ayuntamiento, su punto de recogida más cercano o el distribuidor donde adquirió el producto.

Nederlands



Verwijdering van Oude Elektrische en Elektronische Apparaten (Toepasbaar in de Europese Unie en andere Europese landen met gescheiden ophaalsystemen)

Het symbool op het product of op de verpakking wijst erop dat dit product niet als huishoudafval mag worden behandeld. Het moet echter naar een plaats worden gebracht waar elektrische en elektronische apparatuur wordt gerecycled. Als u ervoor zorgt dat dit product op de correcte manier wordt verwijderd, voorkomt u mogelijk voor mens en milieu negatieve gevolgen die zich zouden kunnen voordoen in geval van verkeerde afvalbehandeling. De recyclage van materialen draagt bij tot het vrijwaren van natuurlijke bronnen. Voor meer details in verband met het recyclen van dit product, neemt u het best contact op met de gemeentelijke instanties, het bedrijf of de dienst belast met de verwijdering van huishoudafval of de winkel waar u het product hebt gekocht.

Svenska



Omhändertagande av gamla elektriska och elektroniska produkter (Användbar i den Europeiska Unionen och andra Europeiska länder med separata insamlingssystem)

Symbolen på produkten eller emballaget anger att produkten inte får hanteras som hushållsavfall. Den skall i stället lämnas in på uppsamlingsplats för återvinning av el- och elektronikkomponenter. Genom att säkerställa att produkten hanteras på rätt sätt bidrar du till att förebygga eventuellt negativa miljö- och hälsoeffekter som kan uppstå om produkten kasseras som vanligt avfall. Återvinning av material hjälper till att bibehålla naturens resurser. För ytterligare upplysningar om återvinning bör du kontakta lokala myndigheter eller sophämtningstjänst eller affären där du köpte varan.

Italiano



Trattamento del dispositivo elettrico od elettronico a fine vita (Applicabile in tutti i paesi dell'Unione Europea e in quelli con sistema di raccolta differenziata)

Questo simbolo sul prodotto o sulla confezione indica che il prodotto non deve essere considerato come un normale rifiuto domestico, ma deve invece essere consegnato ad un punto di raccolta appropriato per il riciclo di apparecchi elettrici ed elettronici. Assicurandovi che questo prodotto sia smaltito correttamente, voi contribuirete a prevenire potenziali conseguenze negative per l'ambiente e per la salute che potrebbero altrimenti essere causate dal suo smaltimento inadeguato. Il riciclaggio dei materiali aiuta a conservare le risorse naturali. Per informazioni più dettagliate circa il riciclaggio di questo prodotto, potete contattare l'ufficio comunale, il servizio locale di smaltimento rifiuti oppure il negozio dove l'avete acquistato.

Język polski



Pozbycie się Zużytego Sprzętu (Stosowane w krajach Unii Europejskiej i w pozostałych krajach europejskich mających własne systemy zbiórki)

Taki symbol na produkcie lub jego opakowaniu oznacza, że produkt nie może być traktowany jako odpad komunalny, lecz powinno się go dostarczyć do odpowiedniego punktu zbiórki sprzętu elektrycznego i elektronicznego, w celu recyklingu. Poprzez upewnię się, że dyspozycja dotycząca produktu jest poprawna, zapobiega się potencjalnym negatywnym wpływom na środowisko oraz zdrowie ludzi, jakie mogłyby wystąpić w przypadku niewłaściwego postępowania. Recykling materiałów pomoże w ochronie naturalnych źródeł. W celu uzyskania bardziej szczegółowych informacji na temat recyklingu tego produktu, należy skontaktować się z naszym lokalnym biurem, ze służbami oczyszczania miasta lub ze sklepem, w którym zakupiony został ten produkt.

Norsk



Avhending av gamle elektriske og elektroniske apparater (gjelder i EU og andre europeiske land med separat innsamlingssystem)

Dette symbolet på produktet eller innpakningen indikerer at dette produktet ikke må håndteres som husholdningsavfall. I stedet skal det leveres inn til spesielt innsamlingspunkt for gjenvinning av det elektriske og elektroniske utstyret. Ved å sørge for at dette produktet avhendes på korrekt måte, vil du hjelpe til med å forhindre potensielle negative påvirkninger på miljøet og helse, som ellers kan være resultatet av feilaktig avfallshåndtering av dette produktet. Gjenvinning av disse materialene vil hjelpe til med å ta vare på våre naturressurser. For mer informasjon om gjenvinning av dette produktet, kan du kontakte lokale myndigheter.

1. INTRODUCTION

This operation instruction manual conforms to the requirements of the Machine Directive 2006/42/EEC . In this light , special attention has been given to safety aspects and accident prevention in the work-place for each stage in the machine's "life". Information which could be of particular assistance to the operator has been highlighted .

The "Operating instructions" are an integral part of the machine and should be consulted before , during and after the start up of the machine and whenever else required . The content of these instructions should always be carefully observed .

The observance of the above is the only way to achieve the two fundamental aims of this manual :

- **Optimization of machine performance .**
- **Prevent damage to the machine and injury to the operator .**

The index of the chapters and the index of the drawings , diagrams and tables is contained in chapter 3 and can be used to help the location of specific information .

CAUTION : BEFORE INSTALLING THE MACHINE , READTHE OPERATING INSTRUCTIONS CAREFULLY

2. INFORMATION ABOUT MAINTENANCE ASSISTANCE

2.1 GUARANTEE

MACC S.r.l. products are guaranteed against material and manufacturing defects for a period of 12 months from the date of delivery or , if the machine is installed by MACC employees , from the date of machine start up . The buyer is only entitled to the replacement of parts which are acknowledged as faulty : carriage and packing are at the buyer's expense .

In the event of the above , the following information should be supplied :

A. Date and number of purchasing document
B. Machine model
C. Serial number
D. Code of any relevant drawings

Requests for compensation for the inactivity of the machine will not be accepted .

The guarantee does not cover uses which are not in line with these operating instructions which are an integral part of the machine . Nor is maintenance covered if the instructions supplied are not observed .

The guarantee will not cover machines which have undergone unauthorized modifications .

Modification or tampering with the safety devices is strictly forbidden .

3. CONTENTS

3.1 INDEX OF CHAPTERS

Cap 1 Introduction
Cap 2 Information about maintenance assistance
Cap 3 Index of chapters , drawings , diagrams and tables
Cap 4 Description of the machine
Safety standards complied with during the design and construction of the machine
Description of the machine and its components
Intended and unsuitable uses of the machine
Cap 5 Main technical data
Cap 6 Handling and transportation
Cap 7 Installation
Cap 8 Start up and operation
Devices and their location
Tools supplied
Operation
Special safety checks
General safety rules
Measures to prevent residual risks
Safety , Guidance , Notice Labels on the Machine
Cap 9 Maintenance and repairs
General safety measures
Routine checks and maintenance
Description of routine maintenance
Possible inconveniences
Cap 10 Information regarding environmental noise
Cap 11 Laying off - Demolition
Cap 12 List of spare parts

3.2 INDEX OF DRAWINGS , DIAGRAMS AND TABLES

ENCL. TYPE	DESCRIPTION	ENCL No.	CHAP.
Table	Cutting capacity - Selection of blade	1	
Drawings	Handling and transportation- Installation plan	2	
Drawings	Base	3	
Drawings	Bow	4	
Drawings	Blade guides	5	
Drawings	Bench	6	
Drawings	Back column	7	
Drawings	Clean blade brush	8	
Drawings	Control panel	9	
Diagram	Hydraulic diagram	10	
Drawing	Electrical components panel	11	
Diagram	Wiring diagram	12	

4. DESCRIPTION OF THE MACHINE

4.1 Safety standards complied with during the design and construction of the machine

The machine produced by us is in compliance with :

- **2006/42/EEC Machinery Directive .**

The following Standards apply :

- EN ISO 12100	2010	Safety of machinery . Basic concepts , general principles for design , basic methodology .
- EN ISO 16093	2017	Safety of machinery . Basic concepts and general principles for design . Specifications and technical principles .
- EN ISO 13850	2015	Safety of machinery . Emergency stop devices , functional aspects - design principles .
- EN ISO 4413-14	2012	Safety requirements related to systems and components for hydraulic and pneumatic transmissions .
- EN 14118	2018	Safety of machinery. Prevention of unexpected start-up .
- EN 14119	2013	Interlocking devices associated with guards — Principles for design and selection .
- EN 60204-1	2016	Safety of machinery . Electrical equipment of machines . General requirements .
- EN 294	2008	Safety distances to prevent danger zones being reached by the upper limbs .

- **2014/30/UE Directive on electromagnetic compatibility .**

The following Standards apply :

- EN 55014-1	2017	Electromagnetic compatibility - Requirements for household appliances , electric tools and similar apparatus .
- EN 61000-3-2	2018	Electromagnetic compatibility – Limits for harmonic current emissions .
- EN 61000-3-11	2017	Electromagnetic compatibility (EMC) – Limitation of voltage changes , voltage fluctuations and flicker in public low-voltage supply systems .
- EN 55032	2015	Electromagnetic compatibility of multimedia equipment - Emission requirements .
- EN 61000-4-2	2008	Electromagnetic compatibility (EMC) Part 4 : Testing and measurement techniques Section 2 : Electrostatic discharge immunity test . EMC Base Publication .
- EN 61000-4-4	2012	Electromagnetic compatibility (EMC) Part 4-4 : Testing and measurement techniques - Electrical fast transient/burst immunity test .
- EN 61000-4-6	2013	Electromagnetic compatibility (EMC) Part 4 : Testing and measurement techniques . Section 6 : Immunity to conducted disturbances , induced by radio-frequency fields .

2014/35/UE Low Voltage Directive .

Directive 2003/11/EC Restrictions on the marketing and use of certain dangerous substances and preparations (pentabromodiphenyl ether , octabromodiphenyl ether) .

Directive 2002/44/EC of the European Parliament and of the Council of 25 June 2002 on the minimum health and safety requirements regarding the exposure of workers to the risks arising from physical agents (vibration) (sixteenth individual Directive within the meaning of Article 16(1) of Directive 89/391/EEC) .

4.2 DESCRIPTION OF THE MACHINE AND ITS COMPONENTS

The SPECIAL 391 SVG band sawing machine produced by MACC has a sturdy frame made from welded and painted sheet-steel . The upper surface is designed to allow the complete draining away of the cutting fluid . The band support bow is made in cast iron , with a suitable dimension to provide the necessary stiffness and precision to the cutting unit . The vice unit is made of cast-iron and clamps the material to be cut securely . The numerical control device allows the required length to be preset and provides high repeated-cut precision .

The coolant pump is fitted to the machine base .

A electromechanical device with pressure switch for band tightening , prevents the band from advancing in the event of insufficient tension and moreover allows ideal operation conditions to be restored at any moment . The main switch is located on the front panel . The blade is protected by a guard with interlock which covers the upper area and the handwheels and by two adjustable lower guards which protect the operator from ejected shavings and coolant . The machine is supplied with a set of service spanners and rod support .

4.3 INTENDED AND UNSUITABLE USES OF THE MACHINE

The SPECIAL 391 SVG band sawing machine has been designed and built to cut bars , structural steel and ferrous metal pipes in accordance with the instructions contained in this manual . Therefore , the cutting of other materials is not permitted : if the above recommendations are not observed , the machine could be damaged and the health and safety of the operator put at risk . Cutting is not permitted , if the bar has not been first locked in the vice .

5. MAIN TECHNICAL DATA

Under no circumstances should the following data be altered , this is in order to protect the correct functioning of the machine and to avoid creating safety risks for the operator .

Three phase power supply	
Motor power	0.9 - 1.6 kW
Motor revolutions	700 - 1420 rpm
Gearbox reduction ratio	i = 1 : 20
Cutting speed	38 - 77 m/1'
Control unit motor	0.55 kW
Electric pump	0.06 kW
Fly wheel dimensions	350 mm
Blade size (length x width x thick)	3200 x 27 x 0.9 mm
Cutting thickness	1,2 mm
Cutting angle	60° dx
Material clamping vice max opening	320mm
Jaws height	150 mm
Jaws length	235 mm
Bed height	850 mm
Clamping force	3920 N (400 kg)
Coolant tank capacity	29 liters ~
Machine weight	~5100 N (520 kg)

6. HANDLING AND TRANSPORTATION

For safe handling and transportation use a lift truck for movement indoors also indicated on the (ENCL.2) . Keep the machine in its normal position and avoid turning it upside down .

7. MACHINE INSTALLATION

A. MACHINE CHECK

The machine should be checked to make sure that it has not been damaged during transportation and handling . If the machine appears to have been damaged , contact MACC immediately .

B. FASTENING OF THE MACHINE

The machine will be able to operate in keeping with the technical parameters supplied by MACC if it is positioned correctly and fastened securely to the bench or the factory floor so that vibrations are minimal during operation .

C. BAND ASSEMBLY

Remove the bow guard 153/37 by unscrewing the screws , fit the band by inserting it first between the bearings of the blade guide heads and then on the two pulleys , tighten the blade slightly by means of the hand wheel 058/35 and replace the bow guard . Check that the band is fitted with the correct direction of teeth , as shown in ENCL.4 . Make sure that the band type (dimensions 3200x27x0.9) and its teeth pitch are suited to the material to be cut .

D. ELECTRICAL CONNECTION TO THE MAINS

Install a differential thermomagnetic switch with characteristics suited to the mains.

Make sure that the power supply voltage corresponds to the voltage on the motor plate . Connect the cable to the power supply line observing the colour codes of the individual wires , pay particular attention to the earth wire . Connect the machine , make sure that the rotation of the circular blade is in the direction shown by the arrow on the guard .

E. CUTTING COOLANT

For the cooling of the circular blade , fill the tank with emulsifiable oil obtained from a mixture of water and WLADOIL EMULSOL SGA/NF oil with a percentage of 5-7%

8. MACHINE START UP AND OPERATION

8.1 DEVICES AND THEIR LOCATION

(The location of the devices described is shown on the SPECIAL 391 SVG installation plan ENCL.2) .

Cod 228 (002/90) CHANGE OVER SWITCH
Cod 226 (085/90) EMERGENCY BUTTON
Cod 011/44 DEVICE FOR THE CUTTING ANGLE
Cod 15/44 – 16/44 VICE
Cod 114 FERMO BARRA
Cod 320/17 VICE CYLINDER
Cod. 216/37 BOW CYLINDER

8.2 TOOLS SUPPLIED

no. 1 hexagonal bar wrench (3)
no. 1 hexagonal bar wrench (5)
no. 1 hexagonal bar wrench (6)
no. 1 hexagonal bar wrench (8)
no. 1 hexagonal bar wrench (10)

8.3 OPERATION

CHECKS TO CARRY OUT BEFORE EACH CUT

A. Tension the band by rotating the hand wheel 058/35 until the white light turns on . Remember at the end of the operation to loosen the hand wheel to avoid the slackening of the band .
B. Check that the hand indicates the required cutting angle (vice scale) .
C. Make sure that the rotating plate are locked by means of the hand wheel 028/36 (ENCL.6) .
D. Bow stroke adjustment: carefully follow the instructions described in the "CUTTING EXECUTION" chapter .
E. Make sure that the piece to be cut is properly secured in the vice .
F. Make sure that the cooling liquid is circulating in the machine .

IT IS STRICTLY FORBIDDEN TO USE THE MACHINE WITHOUT CUTTING FLUID.

G. When starting the motor , make sure that the band rotates in the direction of the arrow shown in (ENCL.4) .
H. To obtain maximum cutting accuracy , the unit must be located the nearest possible to the work piece .
Clamp the work piece with the vice . release the blade guide arm 027-A/32 (ENCL.5) with handle and move it near the vice jaw so that it doesn't touch it during the cutting operation , then secure it again . When carrying out this operation , make sure that the blade guide guard does not come out of the bow guard leaving a part of the blade exposed .
Make sure the pressure gauge on the hydraulic unit indicates a pressure of about 30 bar otherwise place it on this value by the controller of the unit itself .

CUTTING OPERATION

A. Before starting to cut, if the cutting inclination is not the desired one, correct it or change it by putting the bench lever 028/36 in position B (ENCL.6) and , after correcting, bring the lever back to position A by acting with force .
B. Align the roller conveyor, aligning it to the clamp surface using the appropriate screws . For correct positioning , a straight bar resting on the rollers must be parallel and at the same height as the worktop . Introduce the emulsified mixture in the tank for the lubrication and refrigeration of the blade. Check the oil level in the gearbox through the sight glass, with the bow in a horizontal position. Check the blade tension and position the sliding blade guide . Switch on the machine by operating the main switch , choose the blade rotation speed using the selector switch and switch the pump on using the special switch .
C. Turn on the machine using the main switch 228 (002/90) on the control panel. The button A1 starts to flash , press the Reset A button to position the machine, the arc rises to the high point , at this point the button D1 lights up .
If at any command the machine does not make any movement , it is necessary to reverse two phases of the line cable, thus reversing the direction of rotation of the oil pump motor .
With this tool, it is possible to program the high and low limit of the cut directly from the control keypad . To memorize the high limit of the cut, for example , bring the blade closer to the material to be cut, positioning it at about 5-10 mm from it using the C and F keys. To memorize the position it is necessary to press the D (Start) button for about 3 seconds until the LED next to the button starts blinking 3 times indicating that the memorization has been performed , to memorize the low limit of the cut keep the E (Memory) button pressed until it flashes .
To make a cut after storing the desired high and low limit, start the cutting cycle by pressing the Start D button .
Before carrying out this last operation , make sure that the descent regulator 10-A / 38 is closed in order to prevent the blade from falling sharply on the piece to be cut , also check that the ribbon speed selector 203 is in position 1 or 2 so that the blade drive motor is active once the Start D button is pressed .
Positioning the piece on the work surface, pressing the Start D key starts a cutting cycle in which the blade starts to rotate , closes the vice and through the 10-A / 38 regulator the arc descent speed can be changed gradually until you reach the desired one .
When the low limit initially programmed is reached, the arc returns to the starting position and the blade stops . Opens the vice using the vice selector .
To stop the cutting cycle press the Reset A knob, the arc returns to the starting position .
To stop the machine during a cutting cycle, press the emergency button 226 (085/90) . If the machine is not used for more than 3 minutes. , the oil pump switches off automatically ; to turn it on again , press the Reset A button .
To activate the refrigerating electric pump, press the B key .
D. To adjust the closing pressure of the clamp and the cutting, open the door and act on the regulator of the hydraulic unit. Normally the 25 bars are not exceeded .
E. To replace the belt , carry out the same operations as described in the ribbon assembly (chapter 7c) .
F. For the selection of the most suitable blade , refer to the table ALL.1 .
G. When the machine is switched on , if it is switched off or if for some reason the emergency button 226 (085/90) has been pressed, to resume the cycle and bring the machine to the starting position press the RESET button (in third case , first unlock the emergency button) .
It is not recommended to use blades with damaged or insufficiently sharp cutting edges .

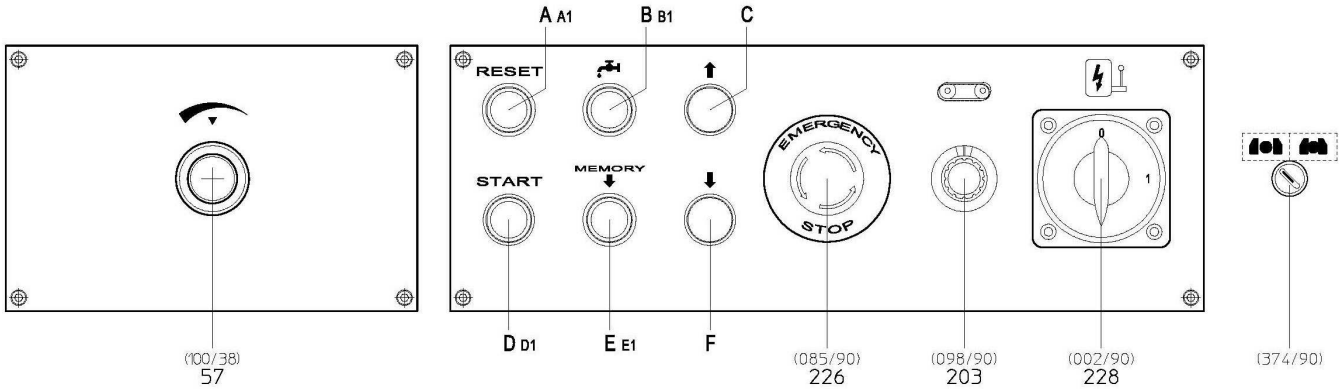

A.	RESET button
B.	motorized cooling pump ON-OFF button
C.	bow up button
D.	START button
E.	bow low limit memorization button
F.	bow down button
A1.	RESET button warning light
B1.	motorized cooling pump button warning light
D1.	START button warning light
E1.	bow bottom limit setting key warning light
57	Descent regulator
203	Change-over switch
226	emergency button
228	Main switch
374/90	Vice selector open - close

8.4 SPECIAL SAFETY CHECKS

A. Before using the machine , check carefully that the safety devices are in good working order , that the mobile parts are not blocked , that no parts are damaged and that all the components are installed correctly and are functioning properly .

B. Make sure , before operating the machine , that the screws of the guards and other protective devices are adequately secured , especially the screws of the bow guard .

C. Check that the safety microswitches and the emergency button are functioning correctly . Test them during a loadless machine cycle .

D. Pay attention to environmental conditions . Do not expose the machine to rain ; to not use it in damp environments , position the machine on a clean dry floor that has no oil or grease stains .

E. Before using the machine , the operator should make sure that all tools and service spanners used for maintenance or adjustment have been removed .

8.5 GENERAL SAFETY RULES

A. Wear appropriate clothing . The operator's clothing should not be loose or dangling nor should it have parts which could easily get caught . Sleeves should contain elastic. Belts , rings or chains should not be worn. Long hair should be kept in a net .

B. Avoid unstable operating positions . Find a safe and evenly balanced position to operate the machine .

C. Keep the work area tidy , untidiness increases the risk of accidents .

D. Do not use the power supply cable to disconnect the plug from the socket . Protect the cable from high temperatures , oil or sharp edges . For outdoor use , only use extension cables which are in line with current regulations .

8.6 MEASURES TO PREVENT RESIDUAL RISKS

A. The removal of guards and tampering with the safety devices is strictly forbidden . Do not remove the guards .

B. Gloves and safety glasses should always be worn .

C. Standard work clothing should be used and kept closed and should not have flapping parts .

D. The machine should not be cleaned with liquids under pressure .

E. In the event of fire , extinguishers should not be used unless they are the powder type . The electric power supply to the machine should always be disconnected in these circumstances .

F. Do not insert foreign bodies into the motor cover and to not supply the machine with voltage by tampering with the safety microswitches or main switch .

G. Take the necessary precautions to avoid the machine being started by other people during loading , adjustment , piece changing or cleaning .

Safety , Guidance , Notice Labels on the Machine

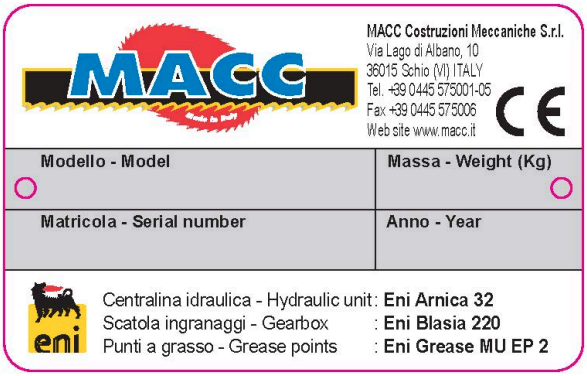



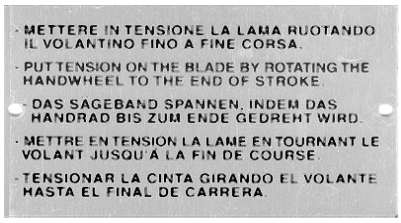









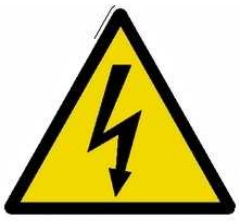











9. MAINTENANCE AND REPAIRS

9.1 GENERAL SAFETY MEASURES

A. Lockable main switch . Use the padlock in the event of machine failure or replacement of the band . The padlock key should be entrusted to a responsible person .

B. Before carrying out any work on electrical equipment , remove the power supply plug from the control panel (disconnect voltage) .

C. Only use cables to supply power , which have a cross-section suited to the power of the machine .

D. Opening key . The keys of the machine should be kept by authorized personnel . Do not leave the keys for doors which provide access to the hydraulic or electrical parts or keys to lockable switches in easy of reach of unauthorized personnel .

E. Repairs should only be carried out by authorized personnel . Only spare parts made by the original manufacturer should be used , otherwise these could cause damage or injury .

9.2 Routine checks and maintenance

FREQUENCY (working hours)	OPERATION
1000 hours	Adjustment blade guide bearings
1000	Lubrication of mobile parts in the piece locking vice (ENI GREASE MU EP 2)
50	Cleaning of the coolant tank and filter check
if necessary	Add hydraulic unit oil with ENI ARNICA 32 (Until the level)

9.3 Description of routine maintenance

A. Adjustment of the blade guide bearings

Loosen the screw 107 , rotate the cams 027/35 , so that the blade guide bushings vertically position the blade in axis (ENCL.5) . Tighten the dowels 105 until the blade secured . Loosen the dowels slightly (about 1/10 of a turn) .

The front blade guide must be positioned as near as possible to the piece to be cut . Check every 3 months the existing tolerance between the blade guides , making sure that it does not exceed the blade thickness of one tenth of a millimetre , so as to avoid inexactnesses in the cut squaring . Periodically check with mounted blade that the blade guide bearings rotate freely .

B. Lubrication of mobile parts of piece locking vice
Clean and grease the vice shaft 280-09-006-A and rotate coupling with grease fitting 109 and 110 (ENCL.6) .

C. Cleaning of the coolant tank .
The cooling tank can be cleaned simply by removing the tank with the filter located at the back of the machine . Empty the tank from the coolant and collect it in a container for subsequent disposal. Remove the chips and the metal dust , taking care not to disperse them on parts of the machine and in particular in the area of the engine and the box containing the electrical equipment. Fill the tank with the quantity and product previously reported .

D. Bench lever operation check
Periodically check the efficiency of the locking lever - rotation release. In case of not effective tightening , loosen the grain 108 (ENCL.6) , tighten the nut 027/04 and fix the grain 108 again . Make sure that with the bench lever in position B the arm 005/44 , which supports the whole motor - blade block , rotates freely .

E. Control unit oil
Check the oil level in the control unit tank and add the missing one .

9.4 EVENTUAL PROBLEMS
A. Oblique cut
Check the inclination of the blade using a dial gauge positioned near the blade guides , act on the adjusting screws of the blade guides to restore the exact inclination .
B. Corrugated-concave-convex cutting
-Check blade wear .
-Check the blade rotation speed according to the material by acting on the speed selector (or on the variator where fitted) .
-Check the exact descent pressure according to the material by acting on the cutting pressure regulator .
-Check the exact alignment of the blade guides , with the mobile one in different positions (act on the grains) .

10. INFORMATION REGARDING ENVIRONMENTAL NOISE

An environmental noise test carried out on the SPECIAL 391 SVG band saw machine , identical to the machine to which these operation instructions refer , has given the following results :

ACOUSTIC RADIATION PRESSURE
1. L_{Aeq} = 83,2 dB (A) .
2. L_{peak} = 90,6 dB (the maximum acceptable value is 140 dB) .
3. The level of background noise has no influence = 48,5-54,2 dB (A) .
The considerable data are the result of tests made under the D. lgs. 277/1991 in the implementation of the directives nr. 80/1107/CEE , nr. 82/605/CEE , nr.84/477/CEE , and 88/642/CEE .

11. LAYING OFF AND DISMANTLING

11.1 LAYING OFF
If the machine is to be laid off or left idle for a long period , the following operations must be carried out :
1. Disconnect the machine from the electricity mains .
2. Empty the cooling liquid to avoid corrosion .
3. Clean carefully the machine by getting rid of all traces of grease , especially on the worked parts that must be protected with anti-oxidants .
4. Cover the machine with a sheet , preferably not plastic as it can cause rust due to the humidity condensation .
5. Store the machine in a closed , dry , dust-free place .

11.2 DISMANTLING
If the machine must be definitively dismantled , its components must be sub-divided for the purpose of a possible recycle of the materials and for the environment safety . The following table is given for your guidance :

Steels	Electric and electronic components	Light alloy	Cast iron	Copper bronze	Plastic and rubber	Various
Shafts , Flanges , Pivots	Motor winding	Motor casing	Structural parts	Bushings	Seals	
Rollers	Electronic panel	Cylinders			Handwheels	
Base					Handles	
Springs						
Tank						
Plate with electrical components	Push buttons and control systems (relays , transformers , etc.)				Cable support chain	
Guards						

Used oil and materials must be disposed of according to 87/101/EEC Directives and to country specific regulations .
The disposal of electrical components is provided for by European Directives 2011/65/UE .

12. LIST OF SPARE PARTS

Allegato / Encl. 3		
Pos./Cod.	**DENOMINATION**	**Q.tà**
001/44	Base	1
002-B/35	Positioning pin	1
002/44	Electrical box door	1
003/44	Chips tank	1
004/44	Cooling tank	1
008/44	Counter-vice bracket	1
009/44	Small lateral grate	1
019/44	Drainage slide	1
034/35	Bench lever hub	1
076/11	Handwheel 6L M8 Female	1
082/14	Ball ø30	1
091/90	Coolant pump SA/85 OPTIONAL	1
093/11	Hinge	2
210/01-002	Level	1

Allegato / Encl. 4		
006/36	Motor pulley	1
010/44	Front carriage support	1
012-D/36	Bow	1
013-A/36	Bow guard hinge	1+1
014/36	Blade tightener pin	1
015/36	Idle pulley	1
016/36	Idle pulley spacer	1
022/90	Micro ERSCHE E100/00/AI	1
034/32	Blade guide fastening plate	1
035/42	Movable blade guide guard	1
037/32	Handle M12x50	1
039/32	Blade tightener screw	1
040-A/06	Washer ø45x6	1
040/06	Washer ø12,5/45x6	2
041/38	Blade tightener bushing	1
046/32	Blade tightener guide plate	2
054/35	Bearing 6208 2RS	1
058/35	Blade tensioning handwheel	1
100-B/42	Worm gear reduction unit	1
103-A/32	Bearing 6207 2RS	2
108/32	Thrust bearing AS 20 35	2
109/32	Cage AXK 20 35	1
125/37	Carriage MTP25EA + Tank	1
153/37	Bow guard	1
181/36	Reduction unit shaft	1
230/80	Motor M100 V230/400-50Hz 2,2kW 4P B5	1
241/37	Blade guard support	1
242/37	Blade guard support plate	1
257-A/37	Small Cover plate	1
257/37	Cover plate	1
330/95	Spring pin	1
355/95	Pin / Key	1
451/95	Belleville washer ø40/20,4x1,5	19
503/80	Speed plate	1
SUP3200270934	Blade LN sv. 3200X27x0,9xt3/4 Superior	1

Allegato / Encl. 5		
018/44	Fixed blade guide guard	1
027-A/32	Blade guide mobile bar	1
028-Y/32	Fixed blade guide plate	1
030/96	Valve mini MF ø1/8”Gas	1
163/50	Bearing 6000-2RS	2
GUIDAL.SB381V	Blade guide group	1
025/35	Fixed blade guide	1
026/35	Mobile blade guide	1
027/35	Blade guide eccentric bushing	2+2
034/42	Blade guide plate	4
163/50	Bearing 6000-2RS	4

Allegato / Encl. 6		
005/44	Rotating arm	1
006/44	Front column	1
007/44	Front column guard	1
011/44	Rotating bank floor	1
012/44	Countervice	1
013/44	Countervice left jaw	1
014/44	Countervice right jaw	1
015/44	Vice jaw	1
016/44	Countervice cylinder support	1
017/44	Countervice pin	1
027/04	Bank lever nut	1
028/36	Bank lever	1
108	Hexagon grub screw UNI-5929 DIN-916 M8	1
126/37	Rail MTP25 L=460	1
280-09-006-A	Carriage vice jaw rod	1
320/17	Countervice cylinder	1

Allegato / Encl. 7		
101/11	Swivel head M16x1.5	1
117/37	Connection cylinder pin	1
125/37	Carriage MTP 25EAAA	3
128-A/37	Bow cable drag chain	1
136/37	Cable drag chain bracket	2
207/37	Bow rear column	1
208/37	Carriage support	1
211/37	Inclined support	1
212/37	Rear column closing plate	1
214/37	Potentiometer upper connection	1
216/37	Bow cylinder	1
227/37	Rail MTP25ST/700	1

Allegato / Encl. 8		
088/50	Brush washer	1
101-A/32	Bearing 6001 2RS	2
118/37	Brush support	1
119/37	Brush shaft	1
120/37	Brush pin	1
121/37	Brush wheel	1
122/37	Brush wheel spacer	1
141/45	Brush	1
412/95	Seeger	2

Allegato / Encl. 9		
002/90	Main switch	1
020/44	Regulator panel and reducer	1
020-A/44	Regulator panel	1
053-G/38	Control panel	1
084-A/90	Single pressure reducer	1
085/90	Emergency button	1
086/90	Start button	2
087/90	Bright start button	4
098/90	Blade speed potentiometer ZA1-4604028	1
100/38	Regulator	1
400/96	Manometer	1
374/90	Selector 3 pos. unstable + contact body	1

Allegato / Encl. 10				
Pos.	**DENOMINATION**	**Brand**	**Code**	**Q.ty**
1	Solenoid valve DHI.0711.23 - 24VDC	ATOS	351/90	2
2	Plug TP1.02600	FBN		1
3	Block solenoid valve		074-C/90	1
4	Cube BL41	BDK		2
5	Manometer 0/100 A.R. ø63	ITALMANOMETRI	164/36	1
6	Excluder FPEA1G1/4B	FLUID PRESS		1
7	Pump N1031083	MARZOCCHI		1
8	Motor 0.55kW 4P B5 230/400V 50Hz		220-B/90	1
9	Filter FR1.02392	FBN		1
10	Tank (to drawing)		077/45	1
11	Level light ø1/2”			1
12	Collector Type A1	HY		1
13	Single pressure reducer		084-A/90	1
14	Manometer 0/60 A.P. ø63 + MICROFD1/8”.1/4 300		400/96	1
15	Bow down regulator		100-A/38	1

Allegato / Encl. 11			
200	Electric components plate	131/38	1
201	Control panel	053-G/38	1
202	Fuse 10x38 gG 4A	204/90	2
203	Potenziometer ZA14604028	098/90	1
204			
205	Transformer 100 VA 0-230-400V 0-24V	044-A/90	1
206			
207			
208	Fuse 10x38 aM 10A	206/90	3
209	Fuse block WEBER PCH3x38	092/90	1
210	Omega raceway	048/90	1
211	Drilled Omega raceway	047/90	1
212	Terminal CABUR CBD.2	222/90	22
213			
214			
215	Remote controlled switch LC1-D12	032/90	3
216			
217			
218	Thermal relay LE2-D1308/10/12	053/90	2
219	Fuse block WEBER PCH1x38	093/90	1
220	Fuse block WEBER PCH2x38	094/90	2
221	Fuse 10x38 aM 6A	205/90	1
222			
223			
224	Start button TCQZB4BA2	086/90	2
225			
226	Emergency button	085/90	1
227			
228	Main switch VEMER CA0120003207 + G595 yellow cover clamp G3228	002/90 065/90	1 1
229	Earth connection bar	050/90	1
230	Control panel gasket	054/38	1
231	Fuse 10x38 aM 2A	356/90	2
232	Scheda SMD 200	357/90	1
233	Bright start button	087/90	4
234	Filter RC400 for single-phase pump	354/90	1
235	Relay Panasonic with 4 contacts 24Vdc Base Panasonic HC 4	112/90 112-A/90	1 1

Details not visible		
084/90	Hydraulic power unit Special-650	1
096/90	Inverter kW 2,2	1
114	Lock SB-270	1

CAPACITA' DI TAGLIO - Special 391 SVG

CAPACITA' DI TAGLIO - CUTTING CAPACITY - CAPACITE DE COUPE SCHNITTKAPAZITAET - CAPACIDAD DE CORTE	○	□	▭
90°	300	280	320 x 200
45° Destra - right - droite - rechts	230	210	230 x 130
60° Destra - right - droite - rechts	130	130	130 x 130

SCELTA DELLA LAMA

SCELTA DELLA LAMA
SELECTION OF BLADE
CHOIX DE LA LAME
WAHL DES SAEGEBLATTS
SELECCION DE LA HOJA

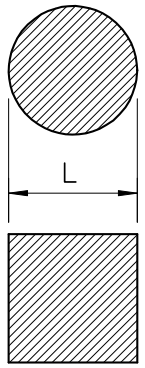

L mm.	Zx1"	Zx1" Zx1"
≦40	8	6/10
>30<80	6	5/8
>60<90	4	4/6
≧100	3	3/4

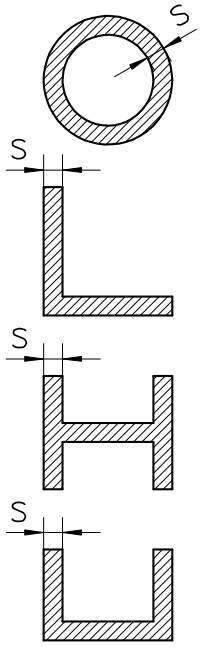

S mm.	Zx1"	Zx1" Zx1"
≦1,5	14	-
>1<2	10	10/14
>2<4	8	8/12
>4<8	6	6/10
>6<12	6	5/8
≧12	4	4/6

Allegato / Encl. 1 - Dis. / Draw. 1

Velocità di taglio La macchina è dotata di due velocità di taglio	**38–77 m/1'**
Cutting machine The machine is equipped with two cutting speeds	**38–77 m/1'**
Vitesse de coupe La machine est dotée de deux vitesses de coupe	**38–77 m/1'**
Schnittgeschwindigkeit Die maschine ist mit zwei Schnittgeschwindigkeiten ausgetattet	**38–77 m/1'**
Velocidad de corte La maquina esta dotata de dos velocidades de corte	**38–77 m/1'**

Materiale Material Materiel Material Material		Velocità di taglio m/1' Cutting machine m/1' Vitesse de coupe m/1' Schnittgeschwindigkeit m/1' Velocidad de corte m/1'
Acciai da costruzione Structural steel Aciers de costruction Baustahl Acero de costruccion	Fe37+Fe42 Fe37+Fe42 Fe37+Fe42 Fe37+Fe42 Fe37+Fe42	Pieni Solid Pleins Volles Material Pies **77**
		Profilati Structural steel Profilés Profile Perfiles **77**
Acciai da costruzione Structural steel Aciers de costruction Baustahl Acero de costruccion	Fe50+Fe70 Fe50+Fe70 Fe50+Fe70 Fe50+Fe70 Fe50+Fe70	**77**
Acciai al carbonio Carbon steel Aciers au carbone Kohlenstoffstahl Acero de carbono	C40+C60 C40+C60 C40+C60 C40+C60 C40+C60	**77**
Acciai legati Alloyed steel Aciers allié Legierter Stahl Acero aleado		**38**
Acciai inox Stainless steel Aciers inoxydables Rostfreier Stahl Acero inoxidable		**38**
Ghisa grigia Grey cast iron Fonte grise Grauguß Fundiciòn gris		**77**
Leghe d'alluminio Alluminium alloys Allieges d'aluminium Legierungen aus Aluminium Aleaciòn de Aluminio		**77**
Bronzi Bronze Bronze Bronze Bronces		**77**

Allegato / Encl. 1 - Dis. / Draw. 2

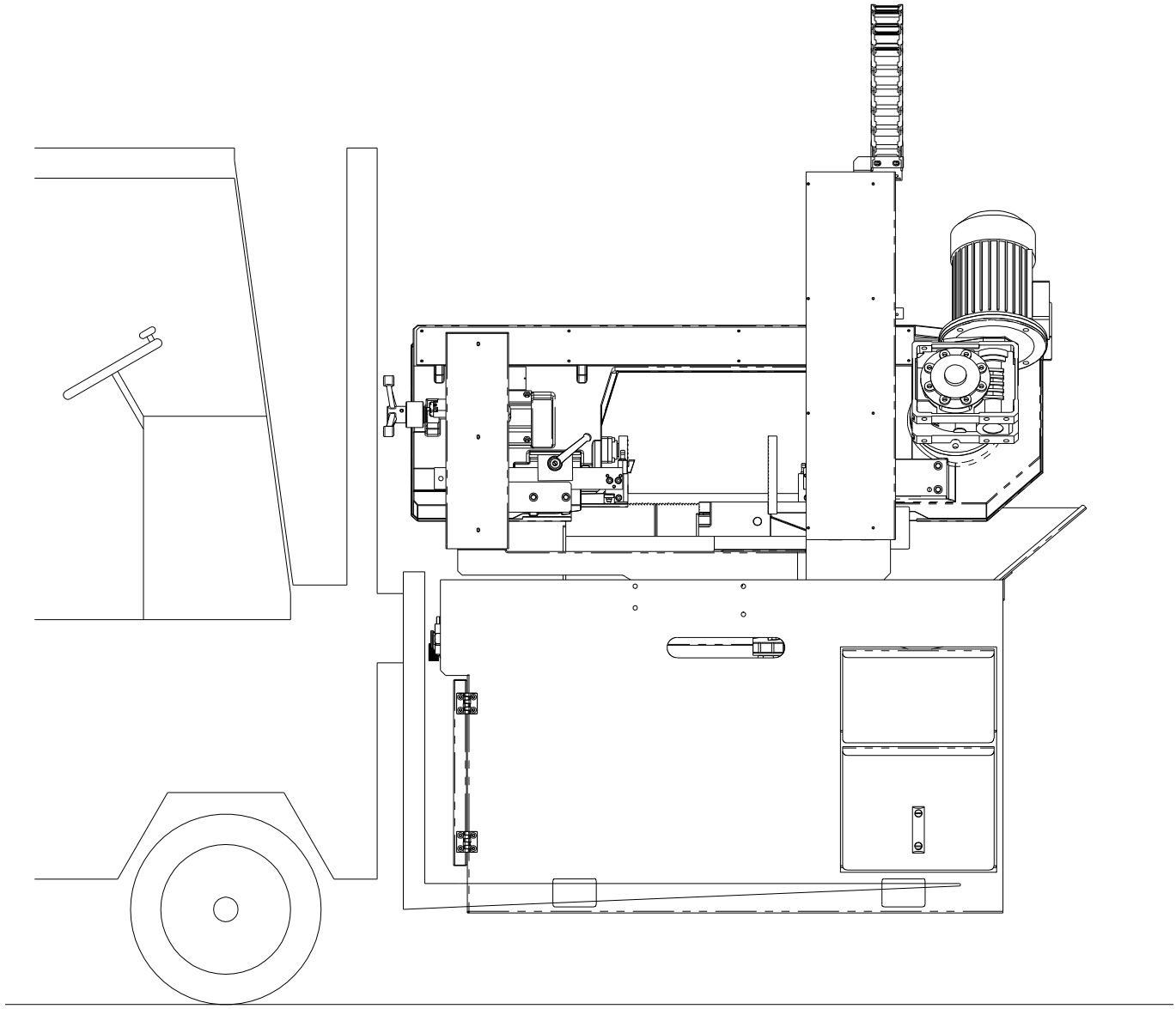

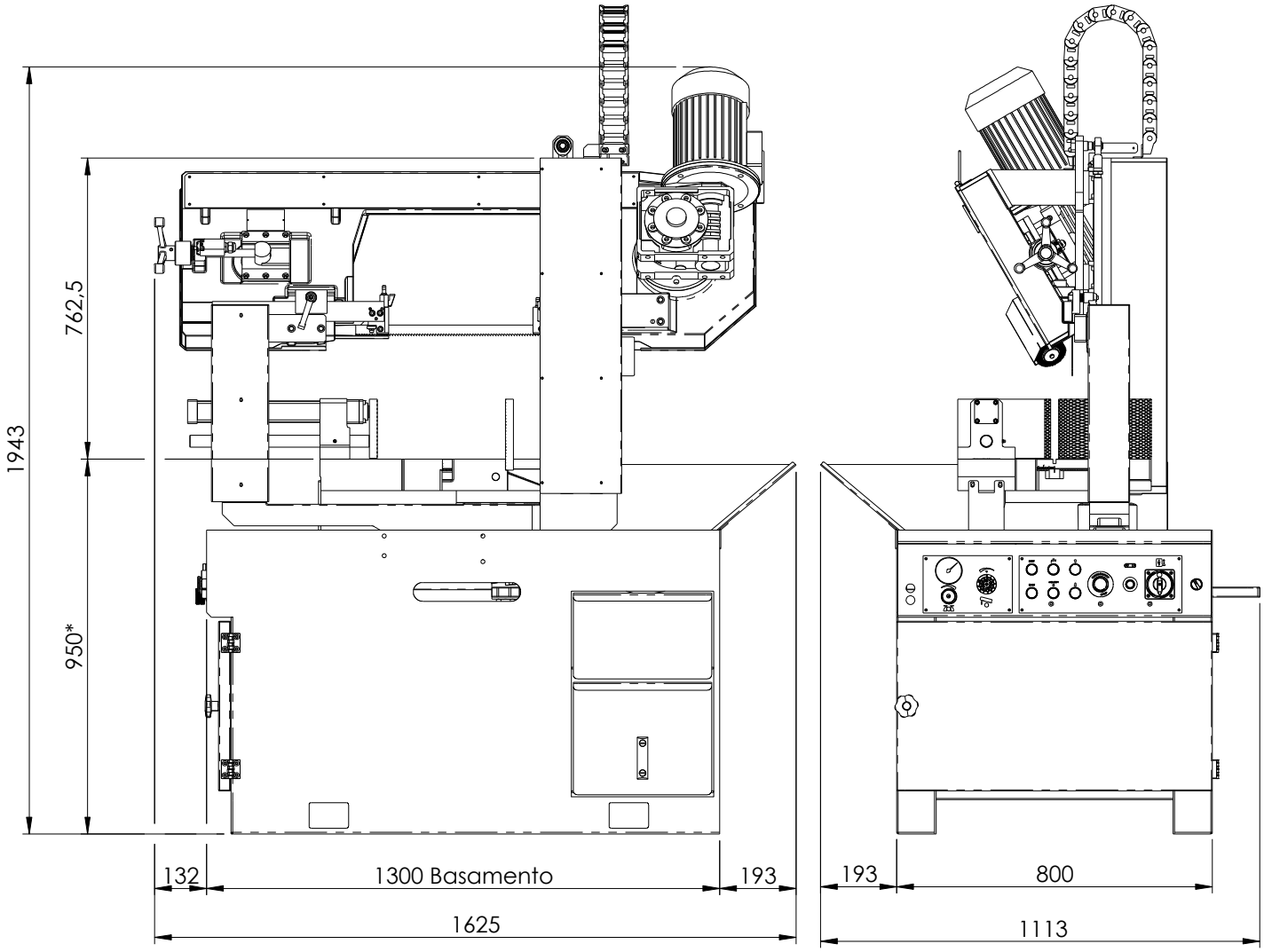

*** = PIANO DI LAVORO**
WORKING TABLE HEIGHT

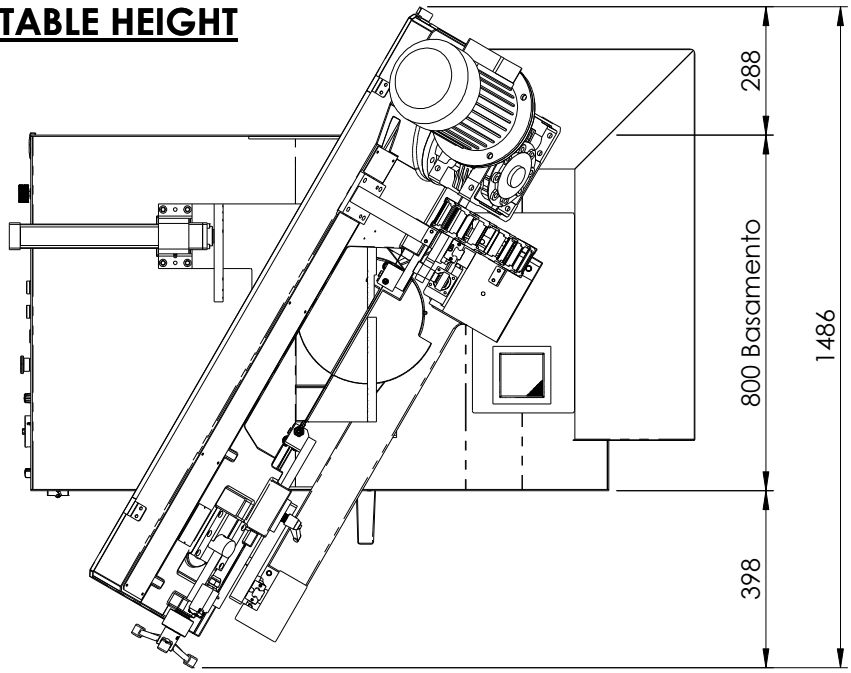

DIMENSIONI D'INGOMBRO ED INSTALLAZIONE	OVERALL DIMENSION AND INSTALLATION	DIMENSIONS HORS-TOUT ET INSTALLATION	AUSSENABMESSUNGEN UND INSTALLATION	DIMENSIONES MÀXIMAS EXTREMAS E INSTALACIÒN

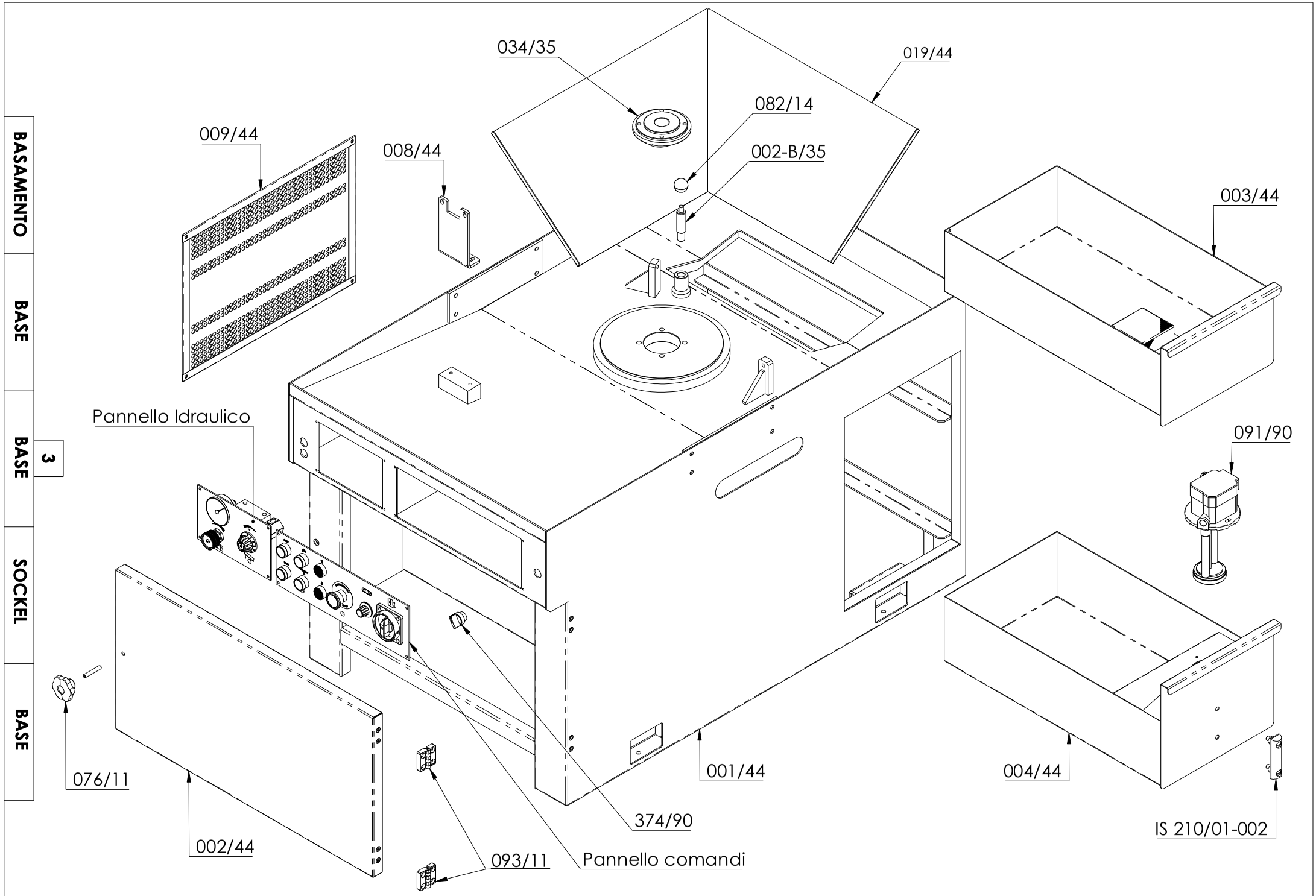

BASAMENTO
BASE
BASE
3
SOCKEL
BASE

ARCO | BOW | ARC 4 | BOGEN | ARCO

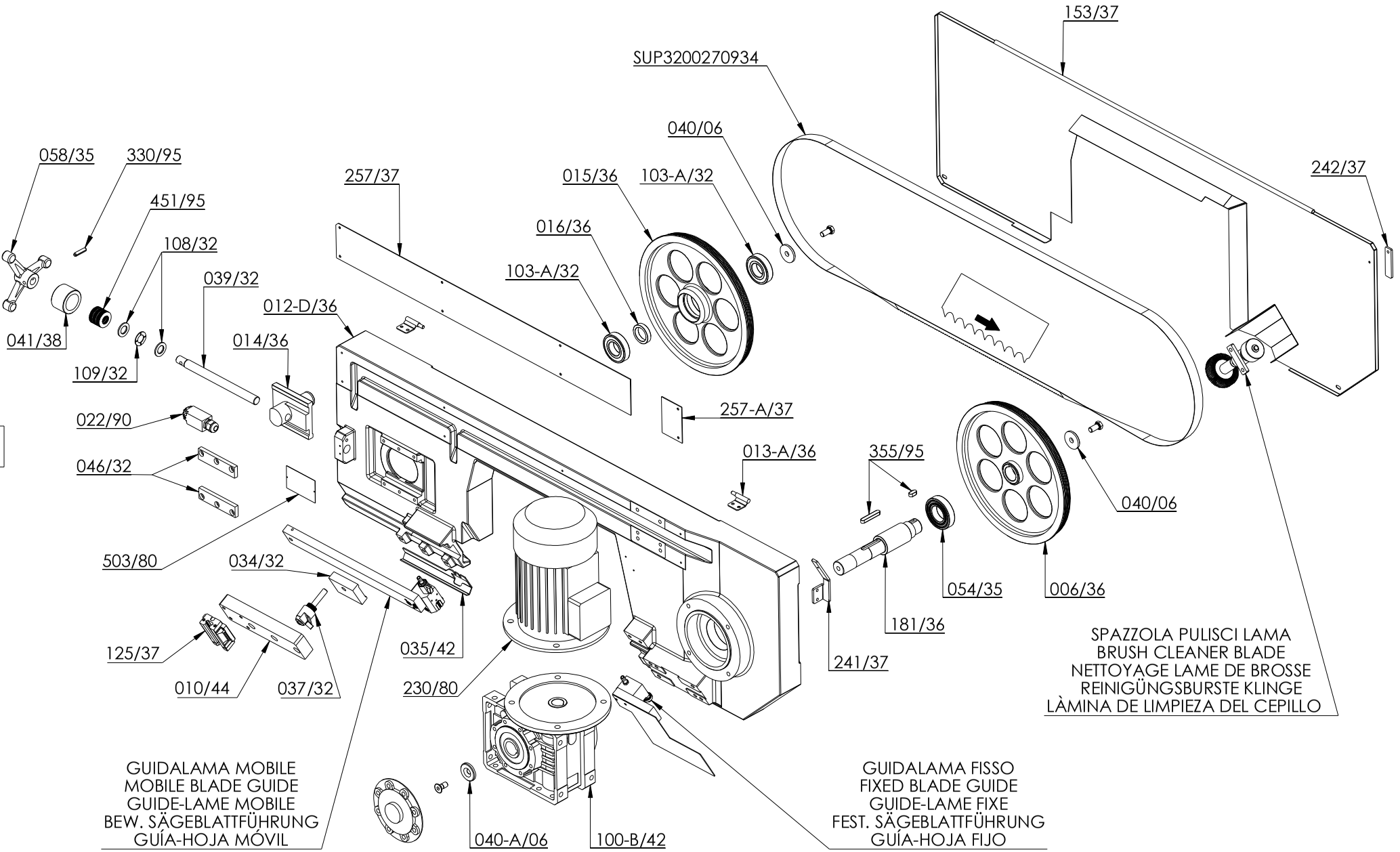

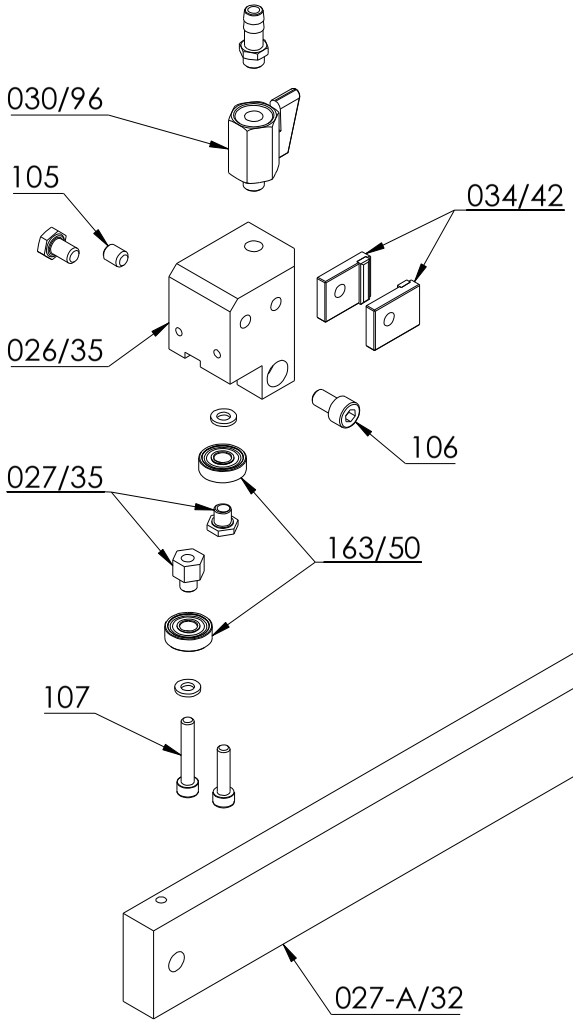

GUIDALAMA MOBILE
MOBILE BLADE GUIDE
GUIDE-LAME MOBILE
BEW. SÄGEBLATTFÜHRUNG
GUÍA-HOJA MÓVIL

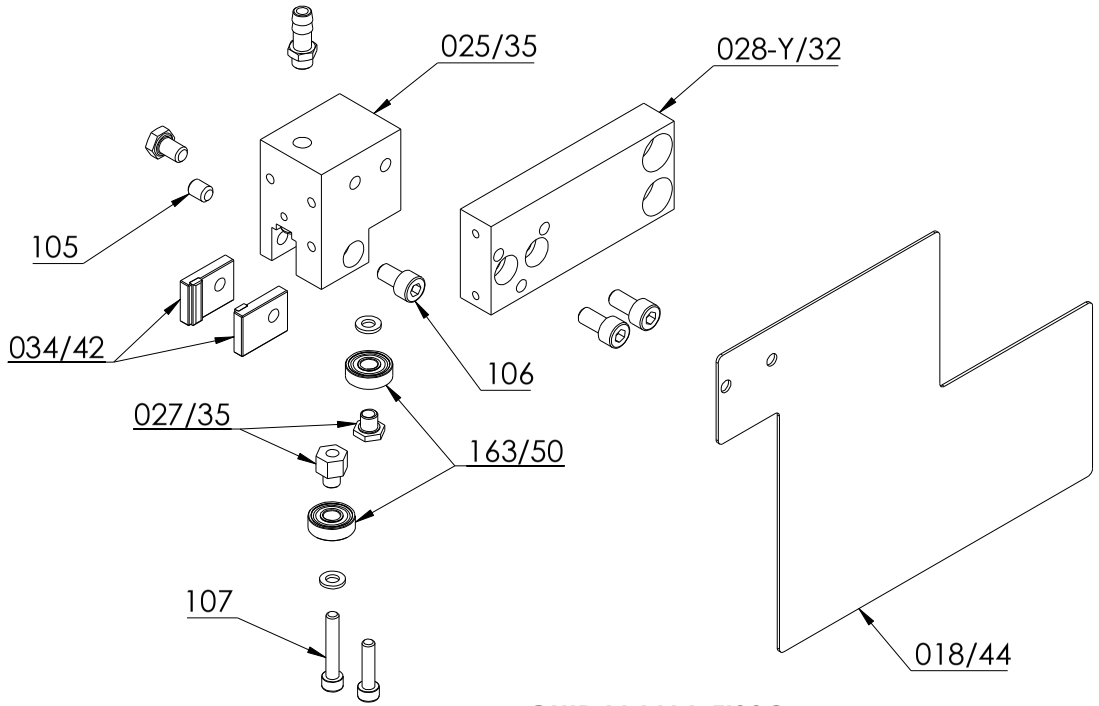

GUIDALAMA FISSO
FIXED BLADE GUIDE
GUIDE-LAME FIXE
FEST. SÄGEBLATTFÜHRUNG
GUÍA-HOJA FIJO

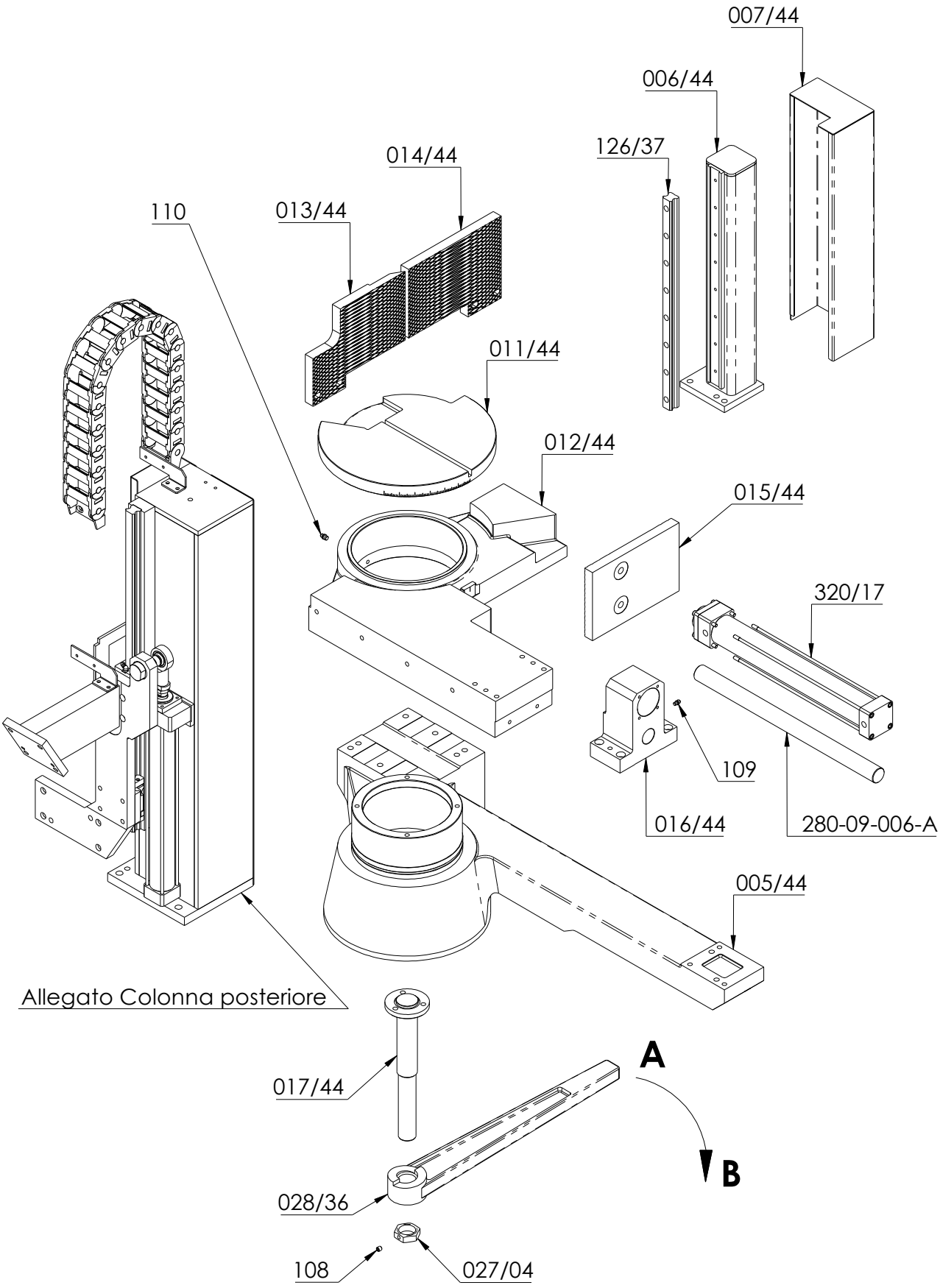

BANCO	BENCH	BANC	BANK	BANCO

COLONNA POSTERIORE
POSTERIOR COLUMN
COLONNE POSTÉRIEURE
HINTERER STÄNDER
COLUMNAS POSTERIOR

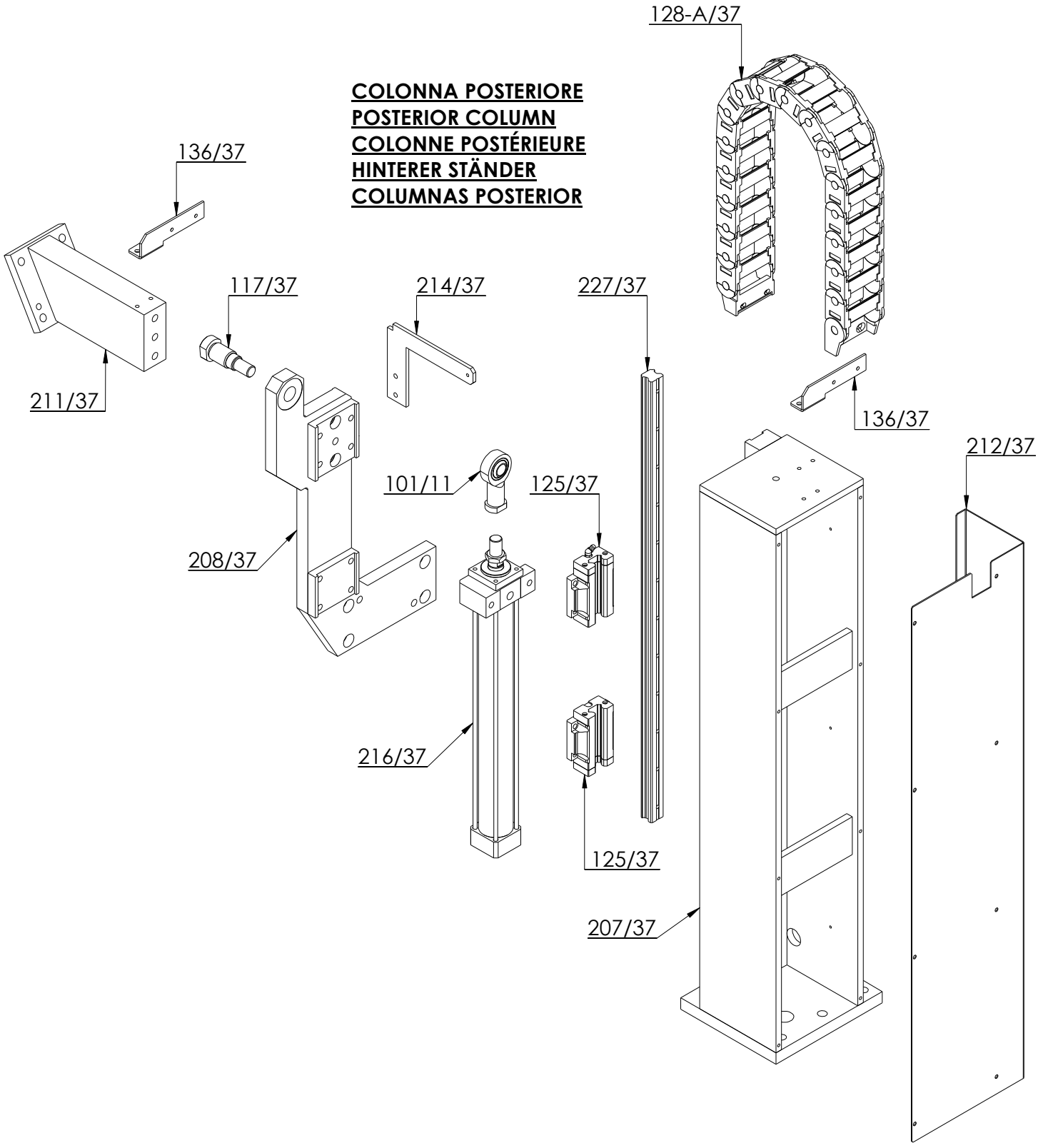

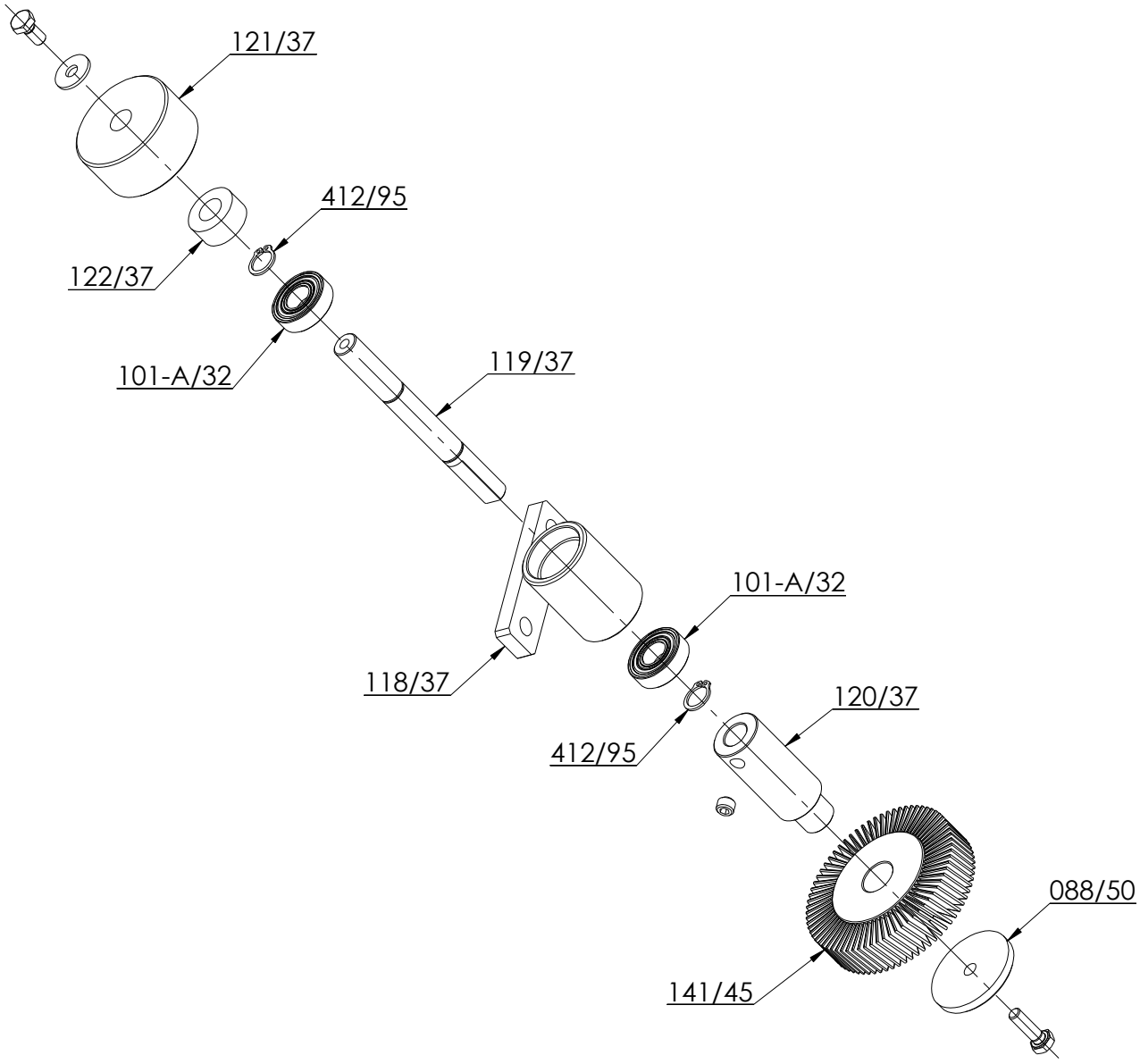

SPAZZOLA PULISCI LAMA	BRUSH CLEANER BLADE	NETTOYAGE LAME DE BROSSE	REINIGÜNGSBURSTE KLINGE	LÀMINA DE LIMPIEZA DEL CEPILLO

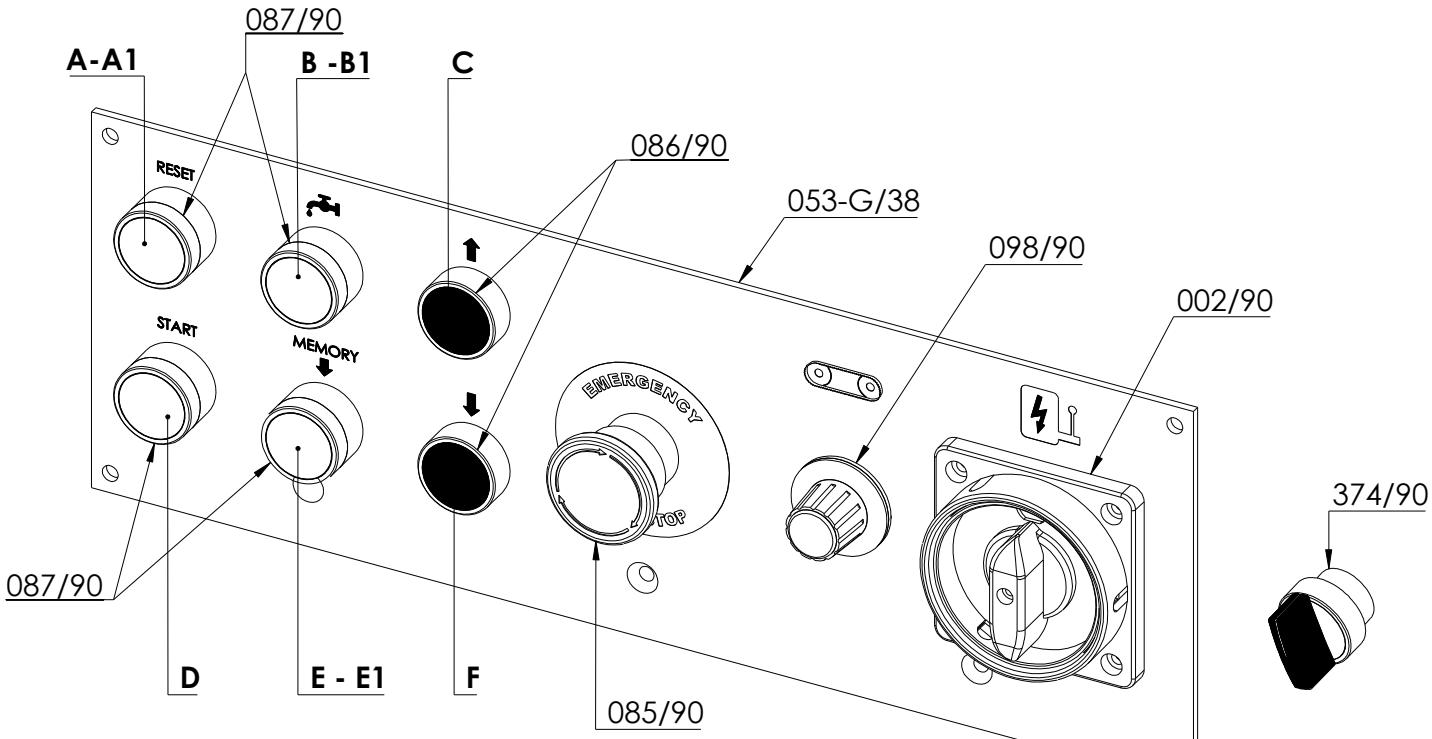

A. Pulsante RESET
B. Pulsante elettropompa refrigerante ON-OFF
C. Pulsante salita arco
D. Pulsante START
E. Pulsante di memorizzazione limite basso arco
F. Pulsante discesa arco
A1. Spia pulsante RESET
B1. Spia pulsante elettropompa refrigerante
E1. Spia pulsante memorizzazione limite basso arco
100/38 Regolatore velocità discesa arco
098/90 Potenziometro velocità lama
085/90 Pulsante a fungo EMERGENZA
002/90 Interruttore generale ON-OFF
374/90 Selettore apertura chiusura morsa

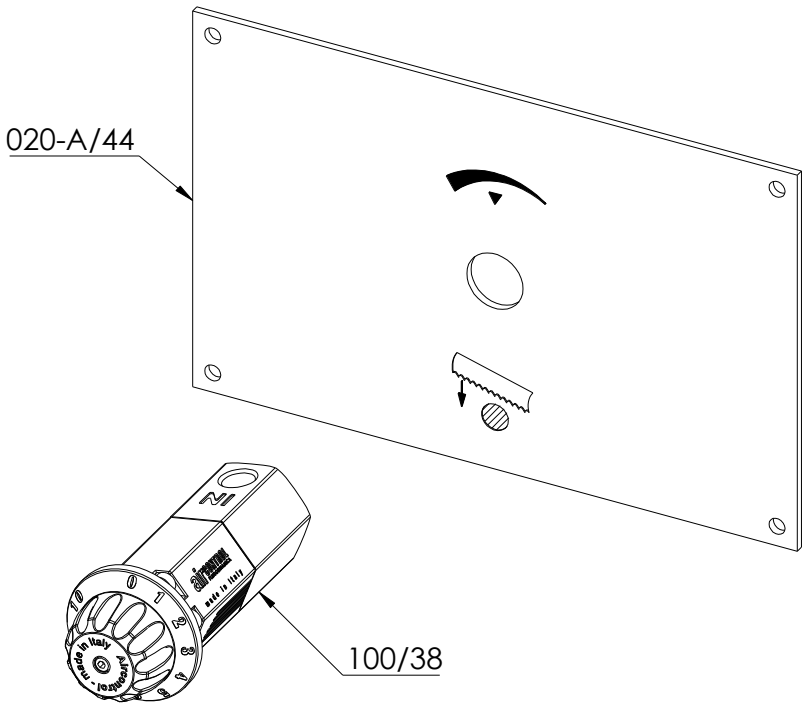

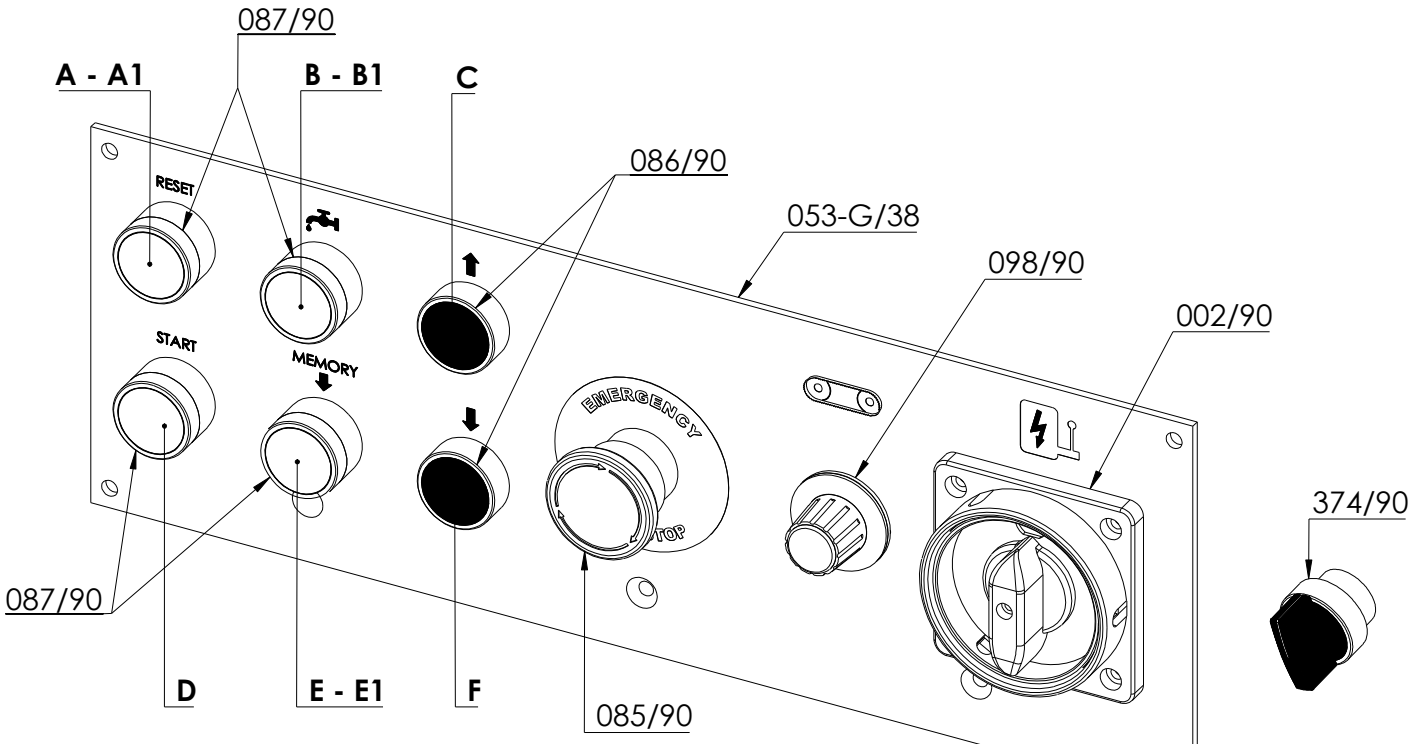

A. Pulsante RESET
B. Pulsante elettropompa refrigerante ON-OFF
C. Pulsante salita arco
D. Pulsante START
E. Pulsante di memorizzazione limite basso arco
F. Pulsante discesa arco
A1. Spia pulsante RESET
B1. Spia pulsante elettropompa refrigerante
E1. Spia pulsante memorizzazione limite basso arco
100/38 Regolatore velocità discesa arco
098/90 Potenziometro velocità lama
085/90 Pulsante a fungo EMERGENZA
002/90 Interruttore generale ON-OFF
084-A/90 Riduttrice morse
374/90 Selettore apertura chiusura morsa

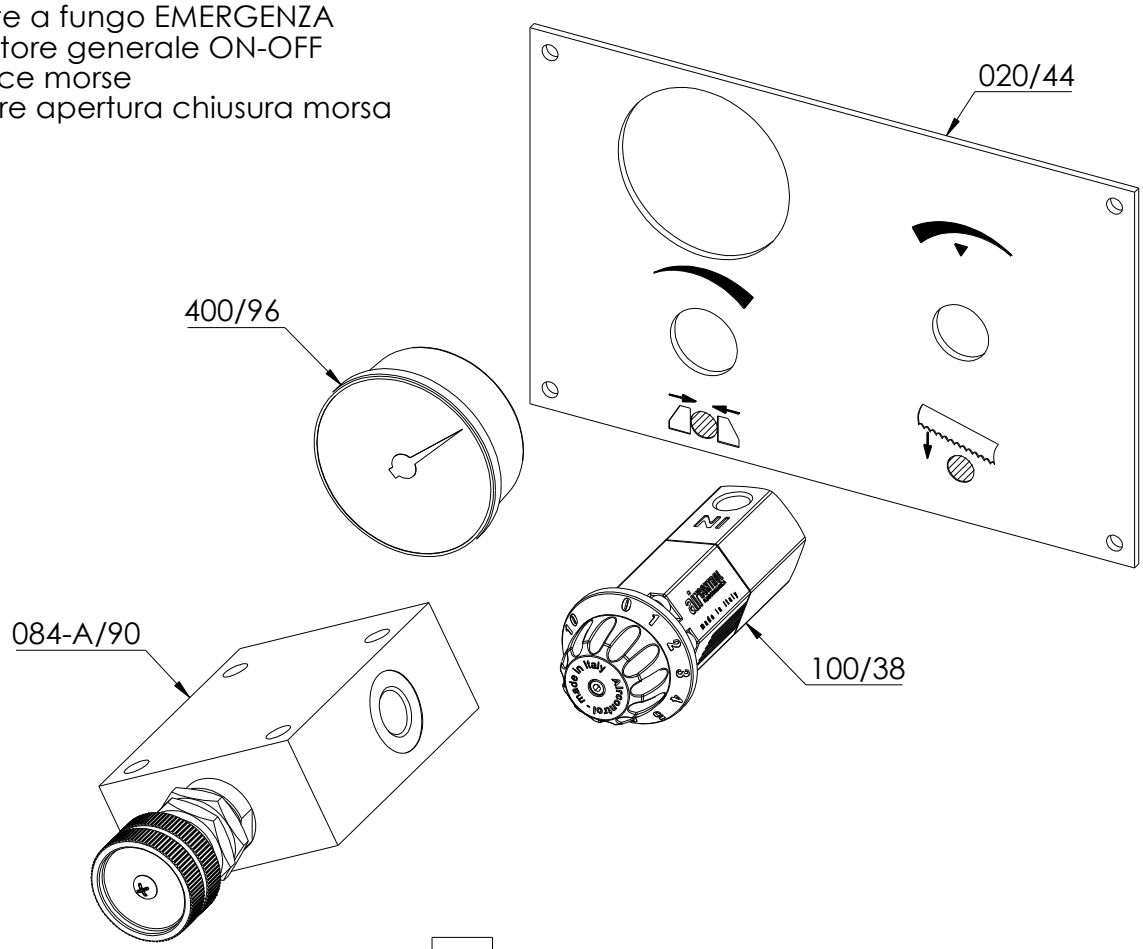

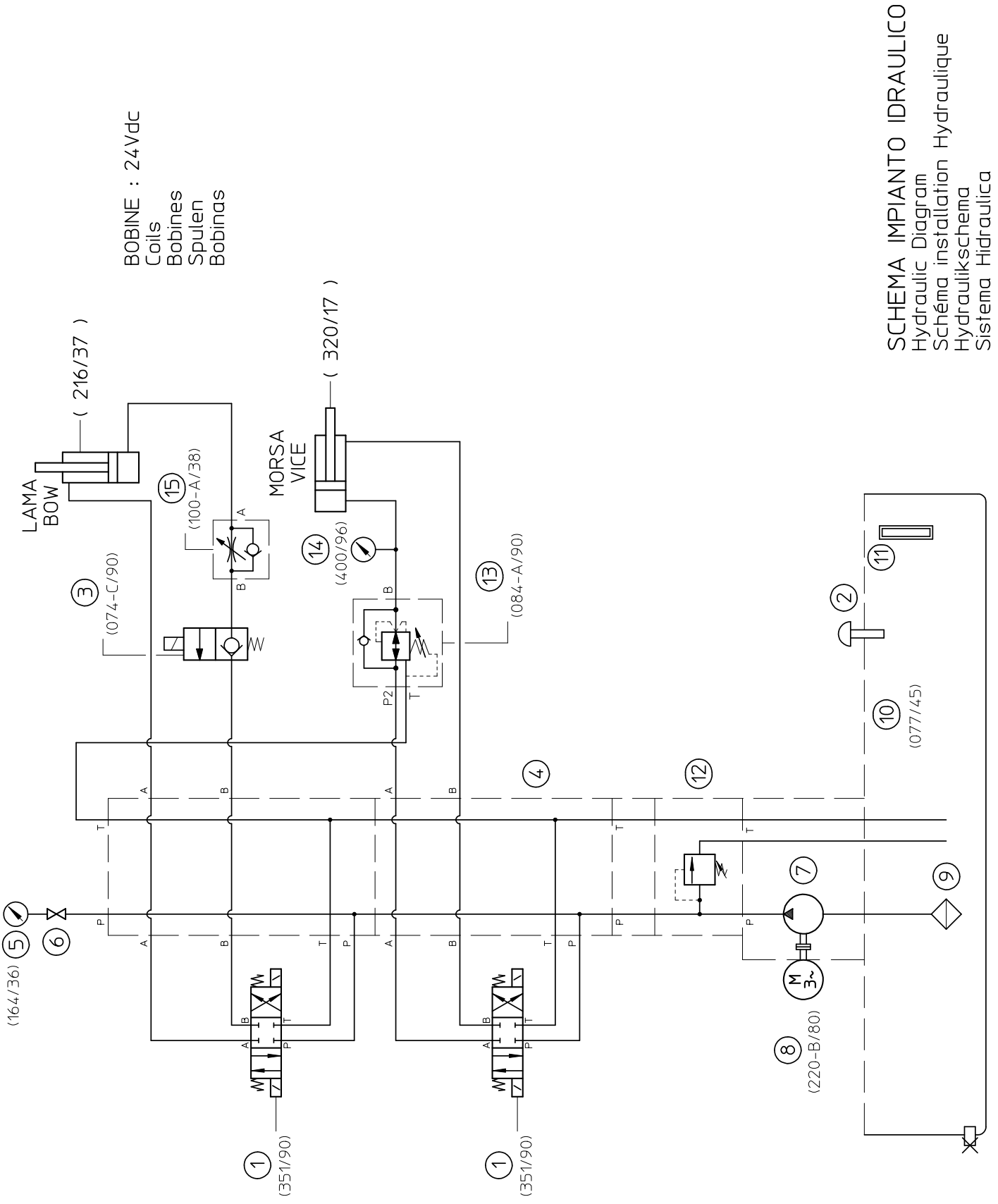

Allegato / Encl. 10

PANNELLO COMANDI SPECIAL 391 SVG

CONTROL PANEL SPECIAL 391 SVG

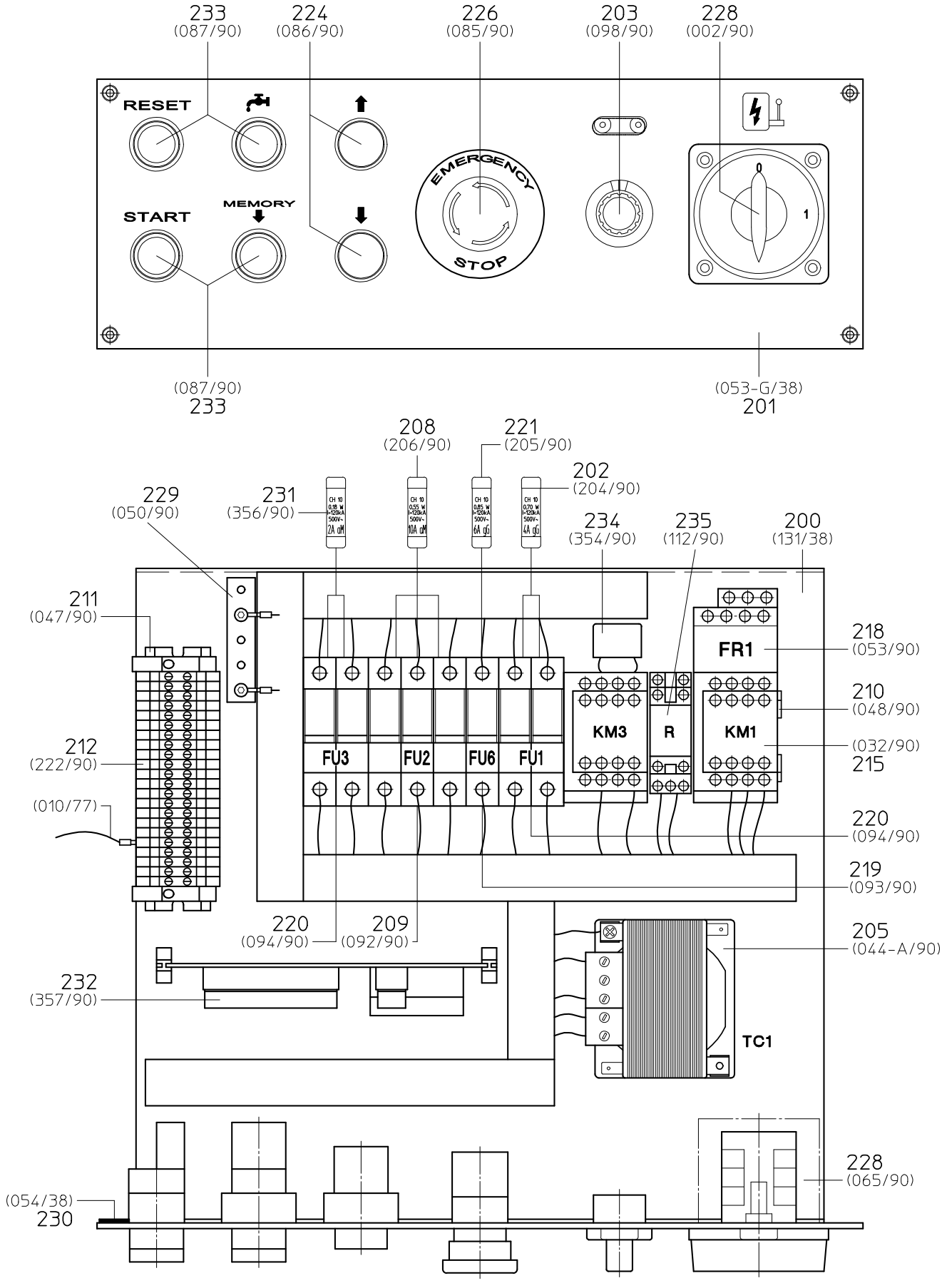

Allegato / Encl. 11

	ITALIANO	ENGLISH	DEUTSCH
FR1	RELE' TERMICO MOTORE POMPA OLIO	THERMAL RELAY OIL PUMP MOTOR	THERMISCHES RELAIS OIL PUMPE MOTOR
FR2	RELE' TERMICO MOTORE LAMA	THERMAL RELAY BLADE MOTOR	THERMISCHES RELAIS SÄGEBLATTMOTOR
FR3	RELE' TERMICO MOTORE REFRIGERANTE	THERMAL RELAY COOLANT MOTOR	THERMISCHES RELAIS ÜHLMITTELMOTOR
FR4	RELE' TERMICO MOTORE ESTRATTORE TRUCIOLI	RELAY THERMAL CHIPS EXTRACTOR MOTOR	THERMISCHES RELAIS CHIP EXTRACTORMOTOR
FR5	RELE' TERMICO MOTORE GUIDA PEZZO	THERMAL RELAY GUIDA-PIECE MOTOR	THERMISCHES RELAIS Motor Führungsstück
FTC	FOTOCELLULA PRESENZA MATERIALE	MATERIAL PRESENCE PHOTOELECTRIC CELL	Photozelle Werkstoff Anwesenheit.
FU1	FUSIBILI PROTEZIONE TRASFORMATORE	FUSE TRANSFORMER PROTECTION	SICHERUNG TRAFO SCHUTZ
FU2	FUSIBILI PROTEZIONE MOTORI	FUSE MOTOR PROTECTION	SICHERUNG MOTOR SCHUTZ
FU3	FUSIBILI PROTEZIONE POMPA REFRIGERANTE	FUSE COOLANT PUMP PROTECTION	SICHERUNG KÜHLMITTELPOMPE SCHUTZ
FU4	FUSIBILI PROTEZIONE ALIMENTATORE	FUSE FEEDER PROTECTION	SICHERUNG ZUFÜHRER SCHUTZ
FU5	FUSIBILI PROTEZIONE 24 V dc	FUSE 24 V dc PROTECTION	SICHERUNG 24 V dc SCHUTZ
FU6	FUSIBILI PROTEZIONE 24 V ac	FUSE 24 V ac PROTECTION	SICHERUNG 24 V ac SCHUTZ
FU7	FUSIBILE PROTEZIONE MOTORE INVERTER	FUSE INVERTER PROTECTION	GESCHWINDIGKEITUMRICHTER SICHERUNGSDRAHT
G	GALLEGGIANTE	FLOAT	SCHWIMMER
H1	SPIA PRESENZA LINEA	SPY LINE PRESENCE	LINE PRÄSENZ LAMPE
H2	SPIA LAMA IN TENSIONE	SPY BLADE IN TENSION	BLATT TENSION LAMPE
H3	SPIA START CICLO	SPY CYCLE START	ZYKLUS START LAMPE
K	TELERUTTORE TERMORESISTENZA	THERMO-RESISTANCE CONTROL SWITCH	KONTAKTGEBER WIDERSTANDSTHERMOMETER
KM0	TELERUTTORE ALIMENT. INVERTER	INVERTER FEEDING CONTROL SWITCH	Fernschalter Frequenzumrichter Versorgung
KM1	TELERUTTORE MOTORE POMPA OLIO	OIL PUMP MOTOR REMOTE CONTROL SWITCH	KONTAKTGEBER ZENTRALHYDRAULIK MOTOR
KM2	TELERUTTORE MOTORE LAMA	BLADE MOTOR REMOTE CONTROL SWITCH	KONTAKTGEBER SÄGEBLATTMOTOR
KM3	TELERUTTORE POMPA REFRIGERANTE	COOLANT PUMP REMOTE CONTROL SWITCH	KONTAKTGEBER KÜHLMITTELPUMPE
KM4	TELERUTTORE ESTRATTORE TRUCIOLI (COCLEA)	CHIP EXTRACTOR CONTROL SWITCH	KONTAKTGEBER SPÄNE AUSZIEHER
KM5	TELERUTTORE MOTORE GUIDA PEZZO	THERMAL RELAY GUIDA-PIECE MOTOR CONTROL SWITCH	KONTAKTGEBER Motor Führungsstück
KM6	TELERUTTORE POMPA RECUPERO REFRIGERANTE	COOLANT RECYCLE PUMP THERMAL RELAY	KONTAKTGEBER KUEHLMITELPUMPE
M1	MOTORE POMPA OLIO	OIL PUMP MOTOR	ZENTRALHYDRAULIKMOTOR
M2	MOTORE LAMA	BLADE MOTOR	SÄGEBLATTMOTOR
M3	MOTORE POMPA REFRIGERANTE	COOLANT PUMP MOTOR	KÜHLMITTELPUMPE MOTOR
M4	MOTORE ESTRATTORE TRUCIOLI	CHIP EXTRACTOR MOTOR	SPAENEAUSLASSVORRICHTUNG MOTOR
M5	MOTORE ROTAZIONE TESTA	SAWHEAD ROTATION MOTOR	DREHUNGS KOPF MOTOR
M50	MOTORE GUIDA PEZZO	GUIDA-PIECE MOTOR	FÜHRUNGSSTÜCK MOTOR

M6	MOTORE AVANZAMENTO MATERIALE	MATERIAL FEEDING OTOR	VORSCHUBMATERIAL MOTOR
P1	POTENZIOMETRO POSIZIONAMENTO LAMA	BLADE POSITIONING POTENTIOMETER	SÄGEBLATT-STENUNG POTENZIOMETER
P2	POTENZIOMETRO VELOCITA' LAMA	BLADE SPEED POTENTIOMETER	SÄGEBLATT-GESCHWINDIGKEIT POTENZIOMETER
PX1	SENSORE ROTAZIONE LAMA	BLADE ROTATION SENSOR	BLATT UMDREHUNGSSENSOR
QS1	INTERRUTTORE GENERALE	MAIN ON / OFF SWITCH	HAUPTSCHALTER
QS2	INTERRUTTORE / COMMUTATORE DI VELOCITA'	SWITCH / SPEED CHANGE OVERSWITCH	SCHALTER / GESCHWINDIGKEIT UMSCHALTER
QS3	INTERRUTTORE POMPA REFRIGERANTE	COOLANT PUMP SWITCH	KÜHLMITTELPUMPE SCHALTER
R	RELE' COMANDO MARCIA ROTAZIONE LAMA	ROTATING BLADE COMMAND RELAY	SÄGEBLATT UMDREHUNG POTENZIOMETER
R1	RELE' COMANDO TELERUTTORE POMPA OLIO	OIL PUMP REMOTE CONTROL SWITCH COMMAND RELAY	RELAIS OIL PUMPE FERNSCHALTER
R10	RELE' PRESSINO ON	VERTICAL VICE RELAY	SENKRECHT SCHRAUBSTOCK RELE
R2	RELE' COMANDO TELERUTTORE LAMA	BLADE REMOTE CONTROL SWITCH COMMAND RELAY	RELAIS BLATT FERNSCHALTER
R5	RELE' COMANDO MICROLUBRIFICAZIONE	MICROLUBRICATION COMMAND RELAY	MIKROSPRÜHEINRICHTUNGSTEUER RELAIS
RT	RELE' TEMPORIZZATORE	TIMER RELAY	ZEITGEBER RELE
RX	RELE' COMANDO TERMOSTATO	THERMOSTAT COMMAND RELAY	THERMOSTATSTEUER RELAIS
RYV5	RELE' DISCESA LAMA	BADE DESCENT RELAY	SAEGEBLATT ABSTIG RELE
S	SELETTORE FUNZIONE	FUNCTION SELECTOR	FUNKTION WÄHLER
S10	SELETTORE PRESSINO ON	VERTICAL VICE ON CHANGEOVER SWITCH	GESCHWINDIGKEITUMRICHTER WAEHLER ON
S4	SELETTORE CAMBIO LAMA	BLADE RELACEMENT CHANGEOVER SWITCH	SAEGEBLATT WAEHLSCHALTER
SB1	PULSANTE DI ARRESTO EMERGENZA	EMERGENCY PUSH BUTTON	NOT AUS TASTER
SB11	PULSANTE DETENSIONAMENTO LAMA	BLADE DETENSIONING BUTTON	SAEGEBLATT ENSPANNSCHALTER
SB12	PULSANTE TENSIONAMENTO LAMA	BLADE TENSIONING BUTTON	SAEGEBLAT SPANNSCHALTER
SB2	PULSANTE START CICLO	CYCLE START BUTTON	ZYKLUS START TASTER
SB3	PUSANTE DI RESET	RESET BUTTON	RESETTASTER
SB4	PULSANTE CHIUSURA MORSA	LOCK VICE BUTTON	SPANNSOCH SCHLIEß TASTER
SB5	PULSANTE APERTURA MORSA	OPEN VICE BUTTON	SPANNSTOCK ÖFFNUNG TASTER
SB6	PULSANTE DI SALITA	BUTTON UP	OBEN TASTER
SB7	PULSANTE DI DISCESA	BUTTON DOWN	HINTEN TASTER
SB8	PULSANTE REFRIGERANTE “ON”	REFRIGERANTE BUTTON “ON”	KÜHLUNG EIN TASTER
SB9	PULSANTE MEMORY	MEMORY BUTTON	MEMORY TASTER
SB90	PULSANTE DI SBLOCCO	RELEASE BUTTON	AUSLOESER TASTE
SQ02	MICROINTERRUTTORE CARTER APERTO SX	COVER OPEN MICROSWITCH	SCHUTZ GEÖFFNET ENDSCHALTER
SQ1	MICROINTERRUTTORE ROTTURA LAMA	MICROSWITCH BLADE FAILURE	ENDSCHALTER BLATT GEBROCHEN

SQ10	MICROINTERRUTTORE START A PEDALE	PEDAL MICROSWITCH START	PEDALS MIKROSCHALTER
SQ11	MICROINTERRUTTORE CHIUSURA MORSA A PEDALE	PEDAL VICE CLOSING MICROSWITCH	FuβSCHALTER SPENNSTOCK SCHLIEβEN MIKROSCHALTER
SQ15	FINECORSA GUIDA PEZZO AVANTI	MICROSWITCH GUIDE-PIECE FORWARD	ENDSCHALTER FÜHRUNGSSTÜCK NACH VORNE
SQ16	FINECORSA GUIDA PEZZO INDIETRO	MICROSWITCH GUIDE-PIECE BACKWARD	ENDSCHALTER FÜHRUNGSSTÜCK NACH HINTEN
SQ18	FINECORSA SOLLEVATORE ALTO	MICROSWITCH LIFT UP POSITION	HEBEWERK NACH OBEN ENDSCHALTER
SQ2	MICROINTERRUTTORE CARTER APERTO	MICROSWITCH PROTECTION CASE	ENDSCHALTER SCHUTZGEHÄUSE
SQ20	PRESSOSTATO CHIUSURA MORSA	VICE PRESSURE SWITCH	SPANNDRUCK TASTE
SQ3	FINECORSA CARRO AVANTI	MICROSWITCH CARRIAGE FORWARD	ENDSCHALTER WAGEN VORNE
SQ30	FINECORSA ROTAZIONE -45°	MICROSWITCH -45° ROTATION	-45° UMDREHUNG ENDSCHALTER
SQ4	FINECORSA CARRO INDIETRO	MICROSWITCH CARRIAGE BACK	ENDSCHALTER WAGEN ZURÜCK
SQ5	FINECORSA TESTA ALTA	MICROSWITCH HEAD / BOW UP	ENDSCHALTER BÜGEL NACH OBEN
SQ6	FINECORSA TESTA BASSA	MICROSWITCH HEAD / BOW DOWN	ENDSCHALTER BÜGEL NACH UNTEN
SQ7	MICROINTERRUTTORE FINE MATERIALE	MICROSWITCH BAR END	ENDSCHALTER STANGENENDE
SQ70	PROSSIMITI PRESENZA PEZZO	MICROSWITCH PIECE PRESENCE	STÜCKANWESENDHEIT ENDSCHALTER
SQ8	MICROINTERRUTTORE MANIGLIONE	MICROSWITCH HANDLE	ENDSCHALTER GRIFF
SQ9	MICROINTERRUTTORE START MANUALE	MICROSWITCH MANUAL START	ENDCSHALTER MANUELL START
T	TEMPORIZZATORE	TIMER	ZEITGEBER
TC1	TRASFORMATORE	TRANSFORMER	TRANSFORMATOR
TR	TERMOSTATO	THERMOSTAT	THERMOSTAT
TR	TERMORESISTENZA	THERMO-RESISTANCE	THERMO-WIDERSTAND
YV1	ELETTROVALVOLA CARRO AVANTI LENTO	CARRIAGE SLOW FORWARD MOTION SOLENOID VALVE	ELEKTROVENTIL WAGEN LANGSAM VORNE
YV10	ELETTROVALVOLA SBLOCCAGGIO MANUALE	MANUAL UNLOCKING SOLENOID VALVE	ELEKTROVENTIL MANUELL AUFHEBUNG
YV11	ELETTROVALVOLA DETENSIONAMENTO LAMA	UNTIGHTNING BLADE SOLENOID VALVE	SAEGEBLATT ENTSPANNUNG MAGNETVENTIL
YV11	ELETTROVALVOLA DETENSIONAMENTO LAMA	BLADE DETENSIONING SOLENOID VALVE	ELETRISCHESVETIL SAEGEBLATT ENSPANNUNG
YV12	ELETTROVALVOLA TENSIONAMENTO LAMA	TIGHTNING BLADE SOLENOID VALVE	SAEGEBLATT SPANNUNG MAGNETVENTIL
YV12	ELETTROVALVOLA TENSIONAMENTO LAMA	BLADE TENSIONING SOLENOID VALVE	ELETRISCHESVENTIL SAEGEBLATT SPANNUNG
YV15	ELETTROVALVOLA SOLLEVATORE CARICATORE	LOADER LIFT SOLENOID VALVE	LADEMAGAZIN HEBEWERK ELEKTROVENTIL
YV16	ELETTROVALVOLA MORSA CARICATORE	LOADER VICE SOLENIOID VALVE	LADEMAGAZINSPANNSTOCK ELEKTROVENTIL
YV18	ELETTROVALVOLA GIUDA PEZZO AVANTI	GUIDE-PIECE FORWARD VALVE	ELEKTROVENTIL ZAUN NACH VORNE
YV19	ELETTROVALVOLA GUIDA PEZZO INDIETRO	GUIDE-PIECE BACKWARD VALVE	ELEKTROVENTIL HINTEREN ZAUN
YV2	ELETTROVALVOLA CARRO INDIETRO LENTO	CARRIAGE SLOW BACK MOTION SOLENOID VALVE	ELEKTROVENTIL WAGEN LANGSAM ZURÜCK
YV20	SBLOCCAGGIO ROTAZIONE	ROTATION UNLOCK	UMDREHUNG LOSMACHEN

YV3	ELETTROVALVOLA MORSA MOBILE	MOVABLE VICE SOLENOID VALVE	ELEKTROVENTIL BEWEGLICHER SPANNSTOCK
YV30	ELETTROVALVOLA MORSA MOBILE CHIUDE	CLOSE MOVABLE VICE VALVE	BEW. SPANNSTOCK SCHLIEß ELEKTROVENTIL
YV30P	ELETTROVALVOLA PRESSINO CARRO	CARRIAGE VICE SOLENOID VALVE	ELETRISCHESVENTIL SCHRAUBSTOCK VORSCHUBWAGEN
YV31	ELETTROVALVOLA RUOTA ARCO LENTO	SLOW BOW ROTATION SOLENOID VALVE	LANGSAM SÄGEARMUMDREHUNG ELEKTROVENTIL
YV37	ELETTROVALVOLA RUOTA DX	ROTATION LEFTWARDS SOLENOID VALVE	UMDREHUNG LINKS ELEKTROVENTIL
YV38	ELETTROVALVOLA RUOTA SX	ROTATION RIGHTWARDS SOLENOID VALVE	UMDREHUNG RECHTS ELEKTROVENTIL
YV4	ELETTROVALVOLA SALITA	UP STROKE SOLENOID VALVE	ELEKTROVENTIL ANSTIEG
YV5	ELETTROVALVOLA DISCESA	DOWN STROKE SOLENOID VALVE	ELEKTROVENTIL ABSTIEG
YV50	ELETTROVALVOLA DISCESA LAMA RAPIDA	QUICK LOWERING SOLENOID VALVE	SCHNELL ELEKTROVENTIL ABSTIEG
YV6	ELETTROVALVOLA APERTURA MORSA FISSA	FIXED VICE OPENING SOLENOID VALVE	ELEKTROVENTIL FESTER SPANNSTOCK ÖFFNUNG
YV60	ELETTROVALVOLA CHIUSURA MORSA FISSA	FIXED VICE CLOSING SOLENOID VALVE	ELEKTROVENTIL FESTER SPANNSTOCK SCHLIESSEN
YV60P	ELETTROVALVOLA PRESSINO FISSO	FIXED VICESOLENOID VALVE	ELETRISCHESVENTIL FESTSCHRAUBSTOCK
YV61	ELETTROVALVOLA SPAZZOLA	BRUSH VALVE	BÜRSTE ELEKTROVENTIL
YV62	ELETTROVALVOLA ATTIVAZIONE 2a POMPA OLIO	SECOND OIL PUMP	ZWEITE ÖLPUMPE EIN ELEKTROVENTIL
YV7	ELETTROVALVOLA CARRO AVANTI	CARRIAGE FORWARD SOLENOID VALVE	ELEKTROVENTIL WAGEN VORNE
YV70	ELETTROVALVOLA SPAZZOLA	BRUSH SOLENOID VALVE	BUERSTE MAGNETVENTIL
YV8	ELETTROVALVOLA CARRO INDIETRO	CARRIAGE BACK SOLENOID VALVE	ELEKTROVENTIL WAGEN ZURÜCK
YV9	ELETTROVALVOLA BLOCCO	MANUAL LOCKING SOLENOID VALVE	ELEKTROVENTIL BLOCK
YV90	ELETTROVALVOLA MICROLUBRIFICAZIONE	MICROLUBRICATION SOLENOID	MIKROSPRÜHEINRICHTUNG ELEKTROVENTIL

400V-50Hz 3F (con inverter DELTA + nebulizzatore) apertura morsa a fine ciclo

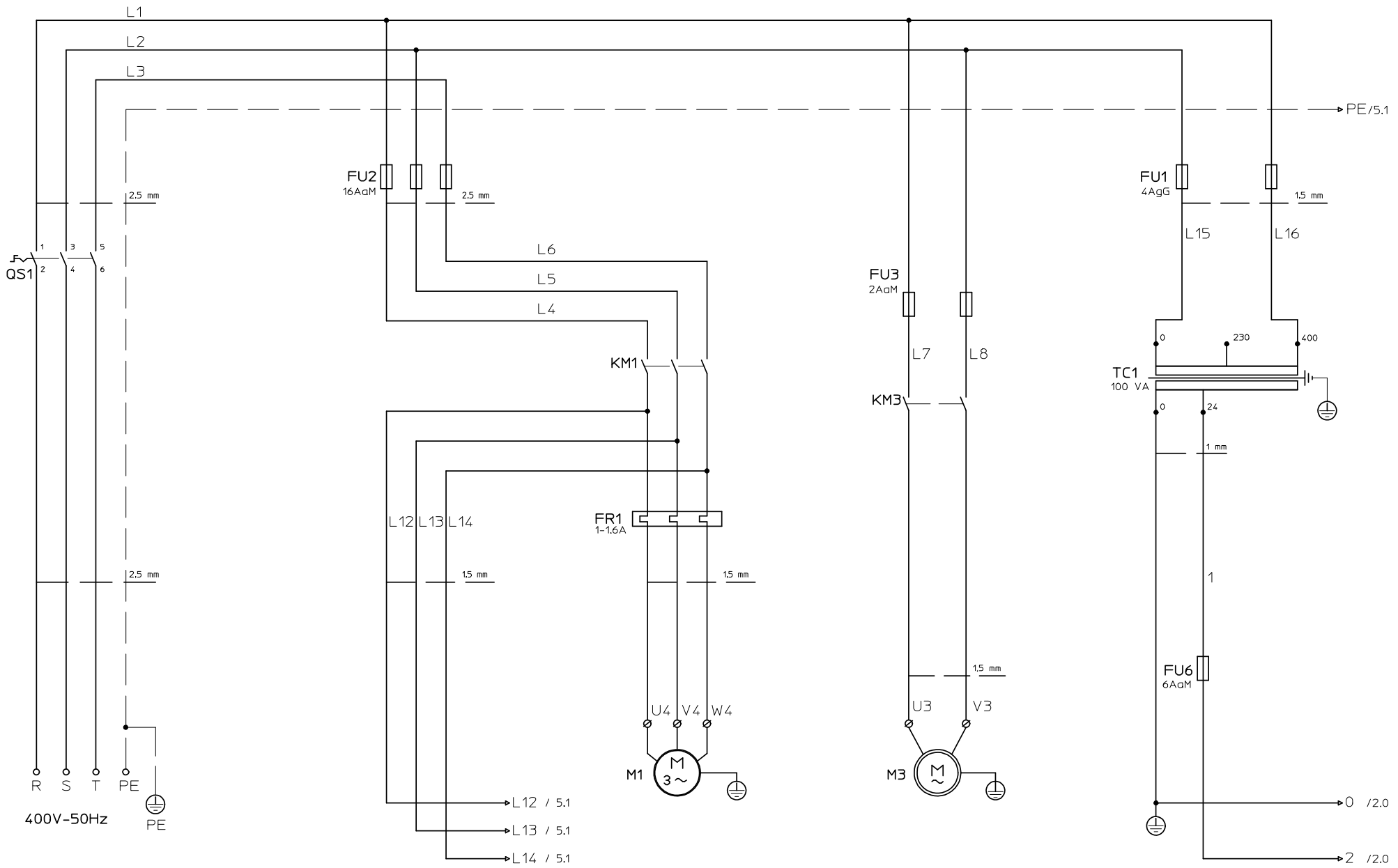

Rev.	Modificato	C./Appr.	Data	Descrizione

DENOMINAZIONE: Schema elettrico di potenza

Data 17/03/2017

Firma *Scremin Andrea*

Contr./Appr.

MACC Schio

Modello: SEGHETTI

Macchina: SPECIAL 391 SVG

N° Schema /

Revisione

Foglio 1 di 7

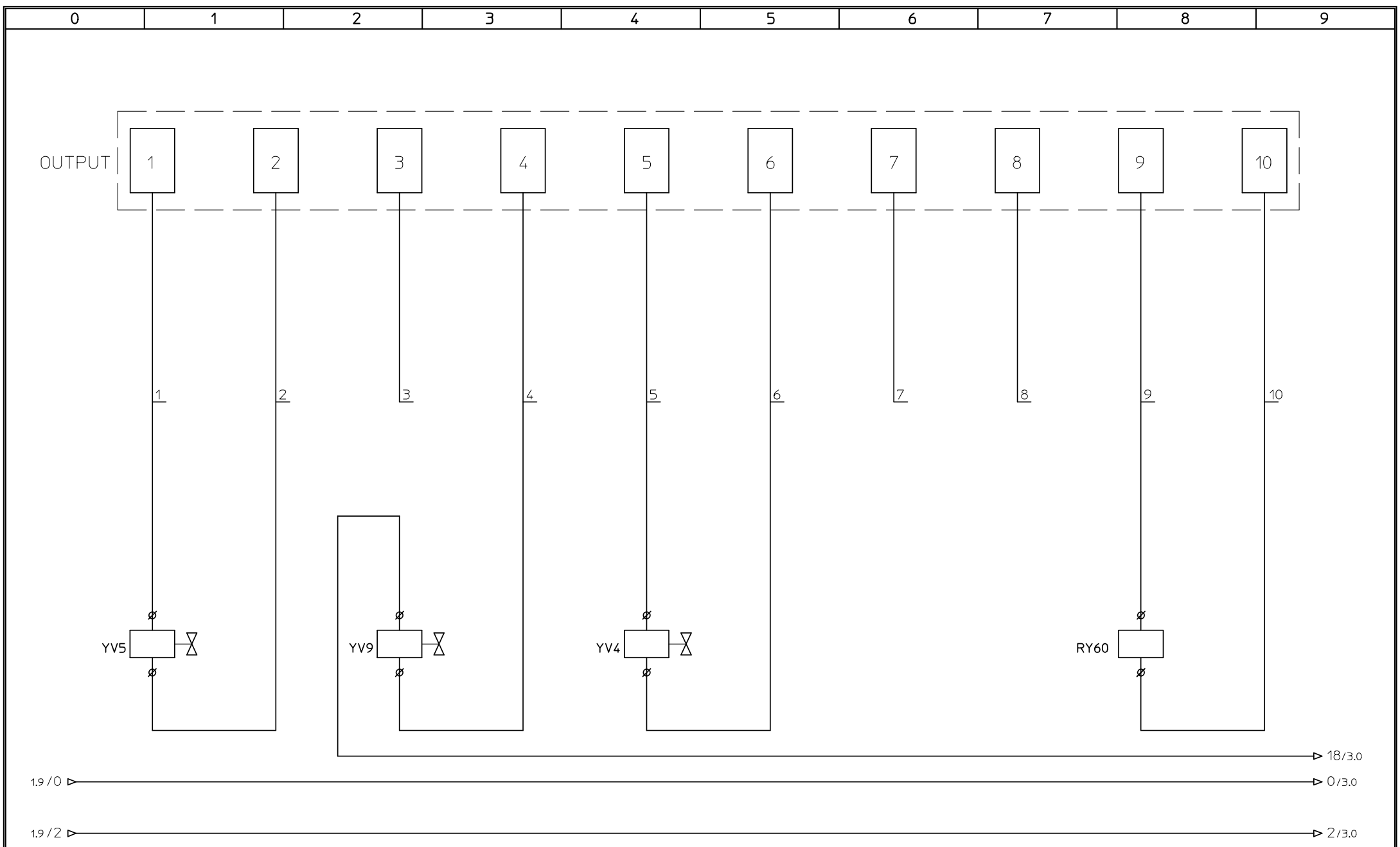

Rev.	Modificato	C./Appr.	Data	Descrizione

DENOMINAZIONE: Schema elettrico di comando OUTPUT

Modello: SEGHETTI

Macchina: SPECIAL 391 SVG

Data 17/03/2017

Firma *Scremin Andrea*

Contr./Appr.

MACC Schio

N° Schema /

Revisione

Foglio 2 di 7

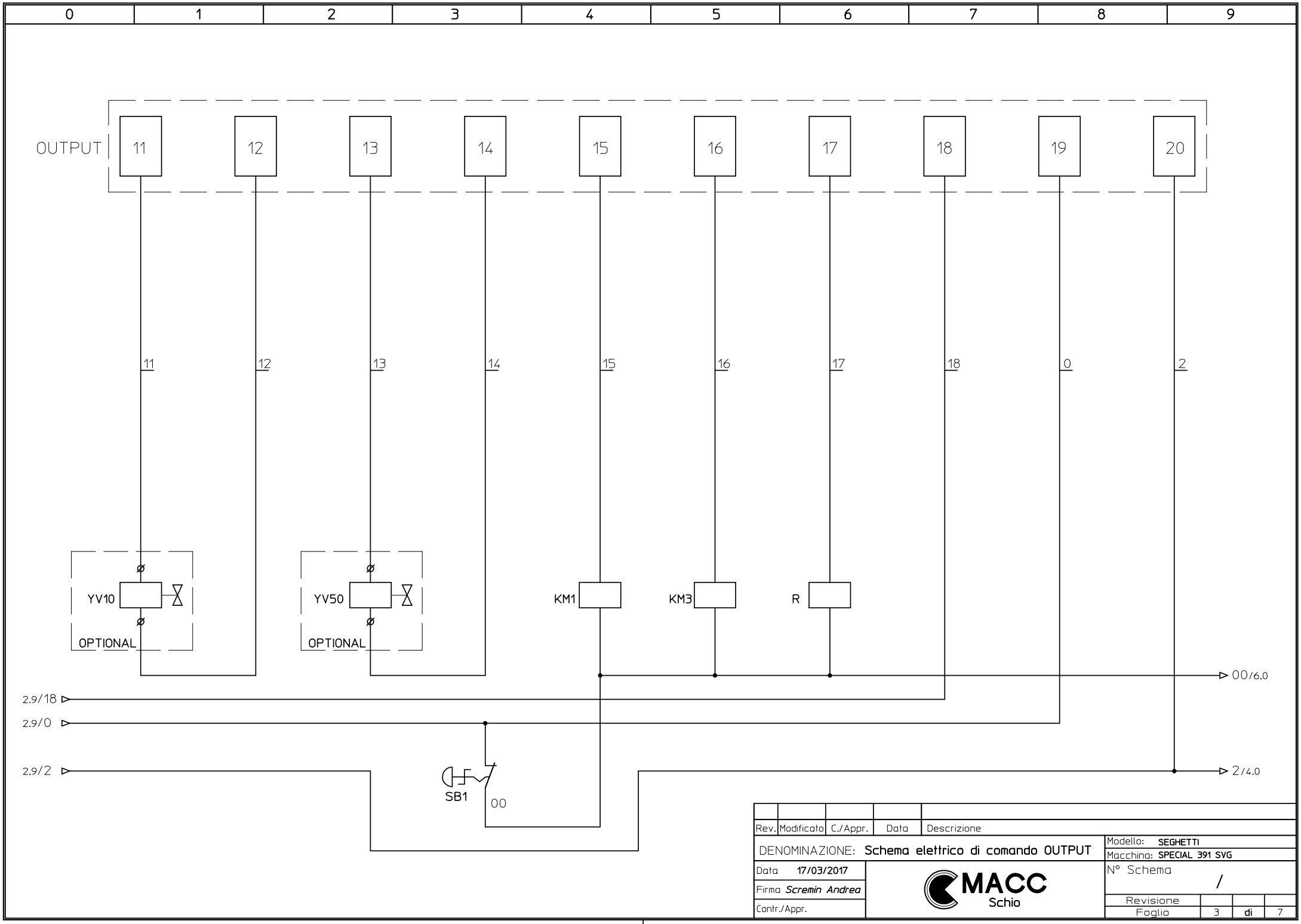
0
1
2
3
4
5
6
7
8
9
OUTPUT
11
12
13
14
15
16
17
18
19
20
11
12
13
14
15
16
17
18
0
2
YV10
OPTIONAL
YV50
OPTIONAL
KM1
KM3
R
00/6.0
2.9/18
2.9/0
2.9/2
SB1
00
2/4.0
Rev.
Modificato
C./Appr.
Data
Descrizione
DENOMINAZIONE: Schema elettrico di comando OUTPUT
Modello: SEGHETTI
Macchina: SPECIAL 391 SVG
Data 17/03/2017
Firma Scremin Andrea
Contr./Appr.
MACC
Schio
N° Schema
/
Revisione
Foglio
3
di
7

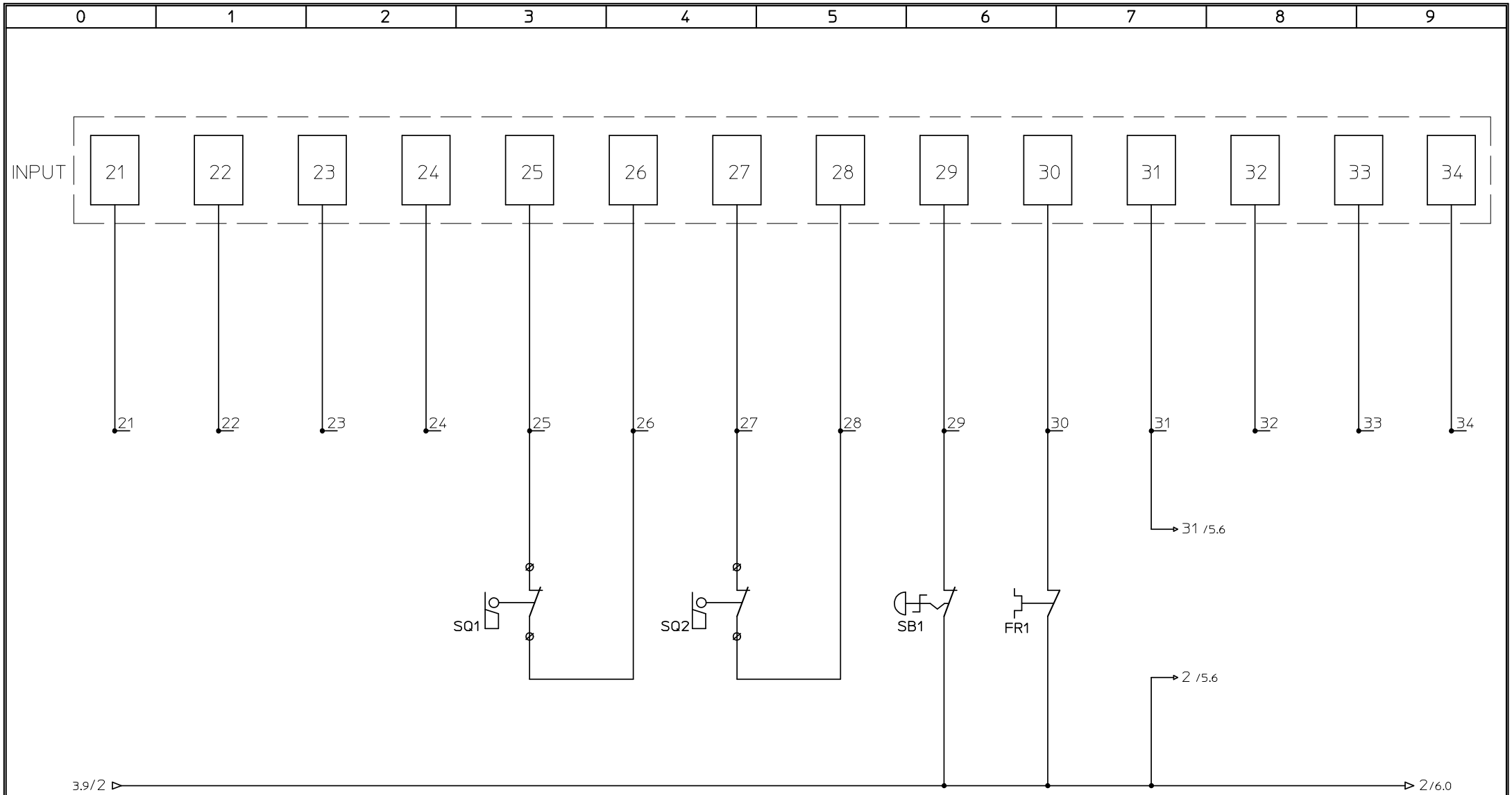

Rev.	Modificato	C./Appr.	Data	Descrizione

DENOMINAZIONE: Schema elettrico di comando INPUT

Modello: SEGHETTI

Macchina: SPECIAL 391 SVG

Data 17/03/2017

Firma *Scremin Andrea*

Contr./Appr.

MACC Schio

N° Schema /

Revisione

Foglio 4 di 7

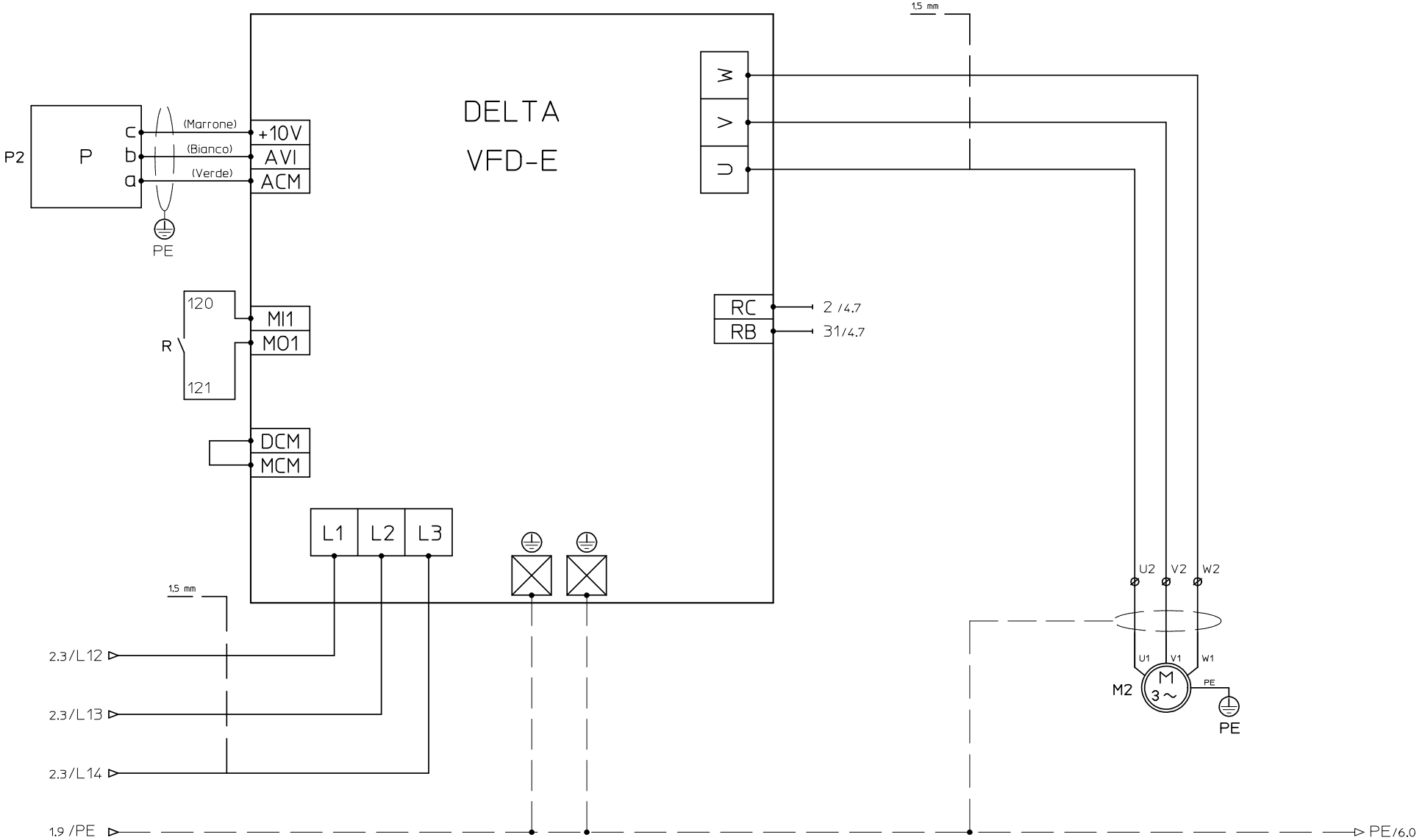

Rev.	Modificato	C./Appr.	Data	Descrizione

DENOMINAZIONE: Schema Elettrico

Data 17/03/2017

Firma *Scremin Andrea*

Contr./Appr.

MACC Schio

Modello: SEGHETTI

Macchina: SPECIAL 391 SVG

N° Schema /

Revisione

Foglio 5 di 7

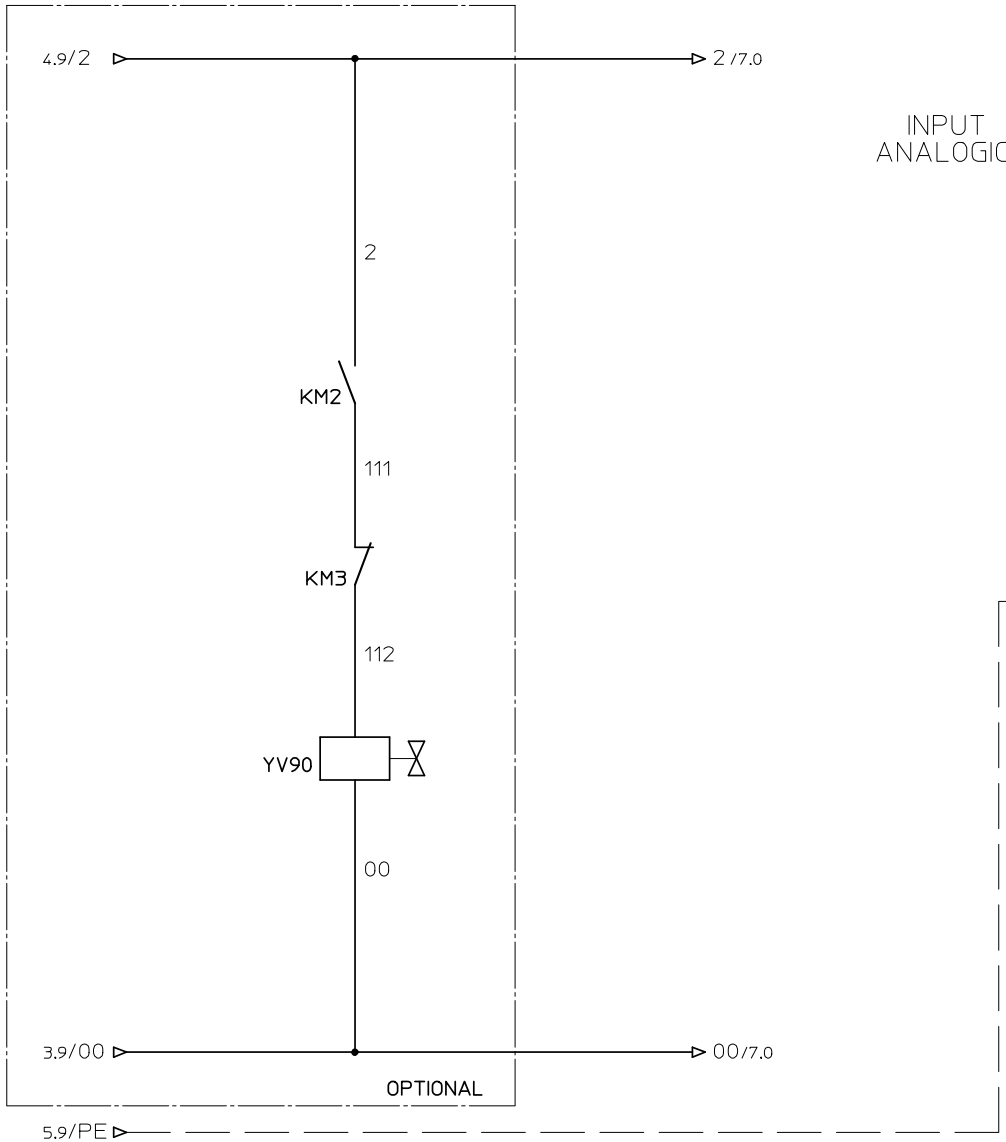

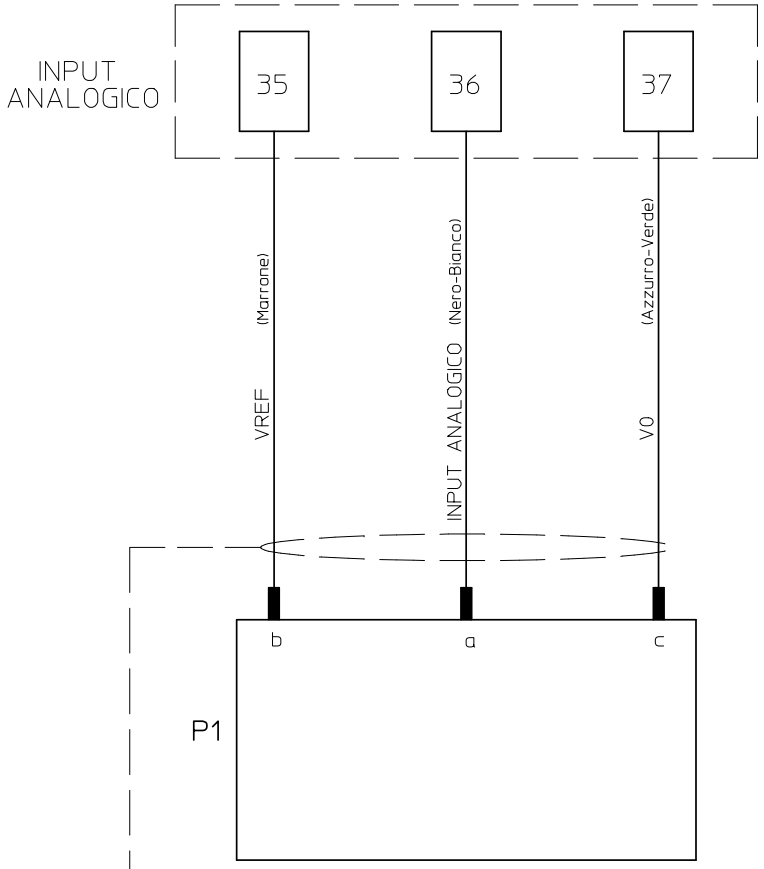

Rev.	Modificato	C./Appr.	Data	Descrizione

DENOMINAZIONE: Schema INPUT analogico

Data 17/03/2017

Firma *Scremin Andrea*

Contr./Appr.

MACC Schio

Modello: SEGHETTI

Macchina: SPECIAL 391 SVG

N° Schema /

Revisione

Foglio 6 di 7

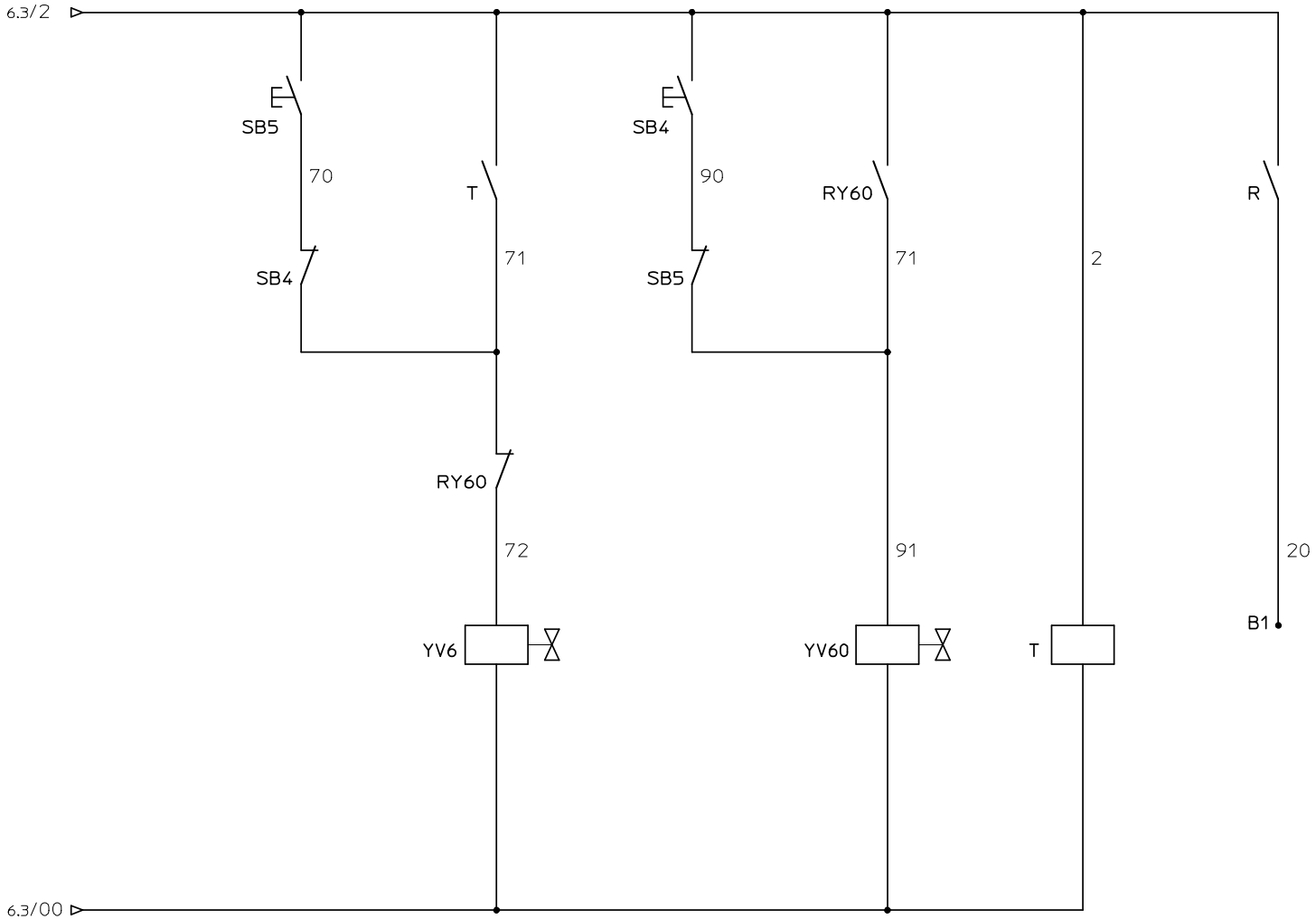

Rev.	Modificato	C./Appr.	Data	Descrizione

DENOMINAZIONE: Schema elettrico di comando

Modello: SEGHETTI

Macchina: SPECIAL 391 SVG

Data 17/03/20017

Firma *Scremin Andrea*

Contr./Appr.

MACC Schio

N° Schema /

Revisione

Foglio 7 di 7

CONTROLLATO IL:	07/05/2020
DA:	
REV.:	0